156862-1

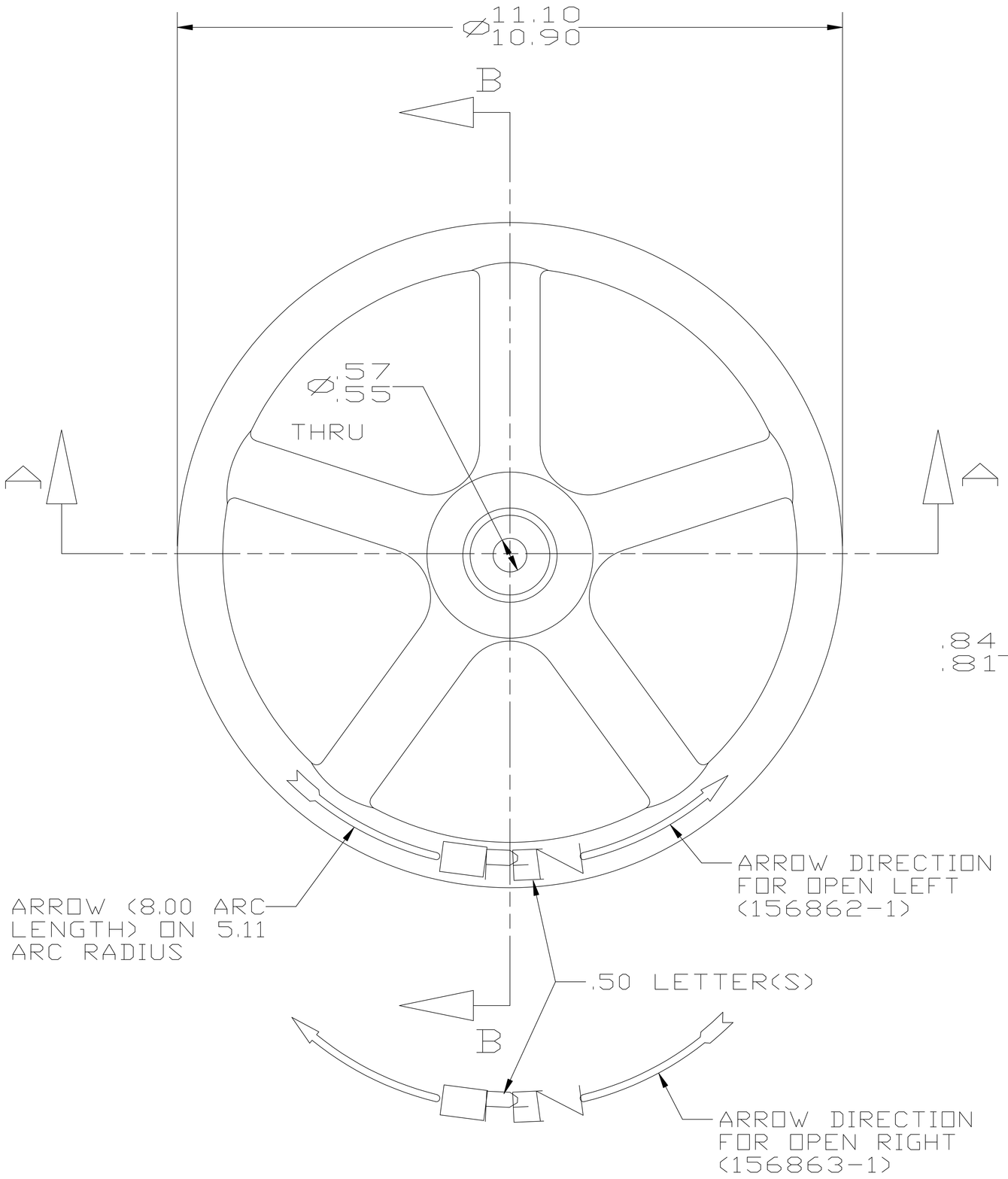

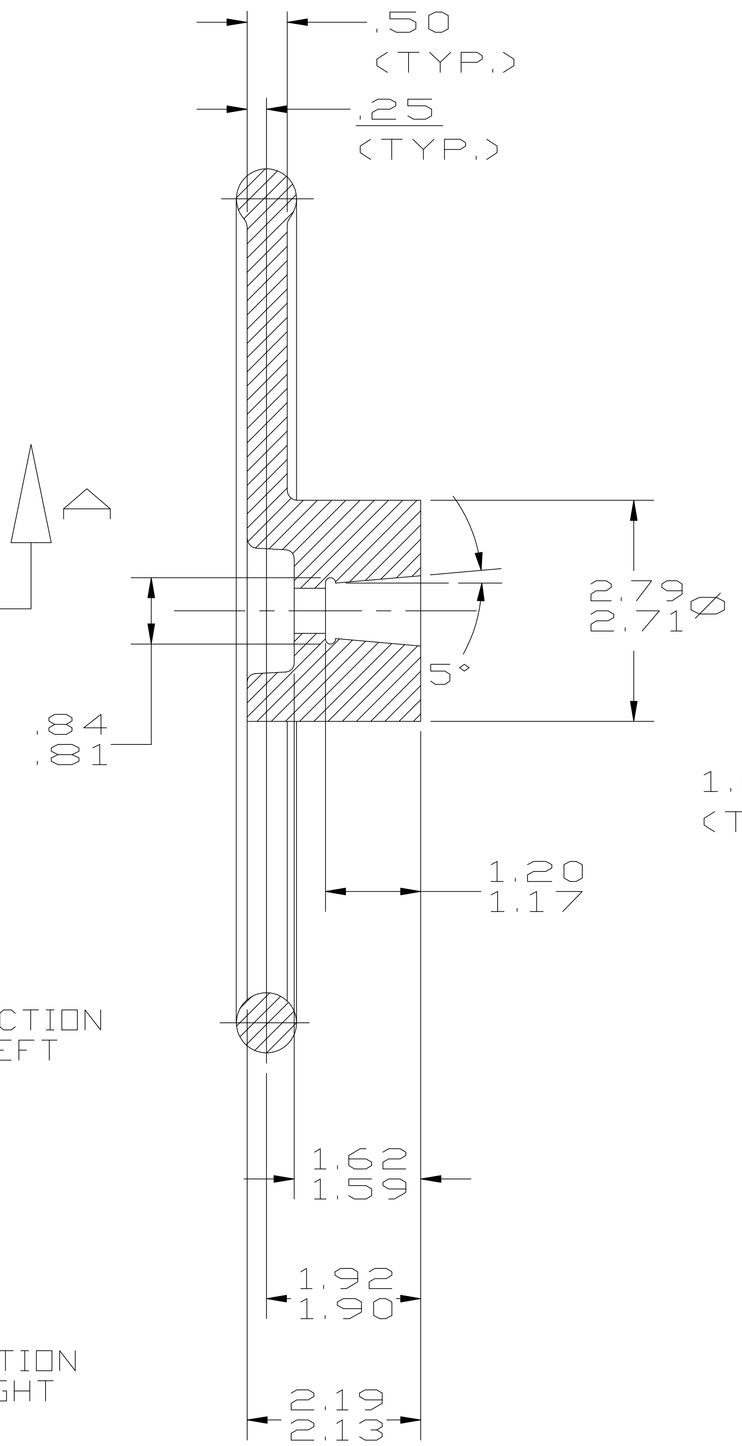

SECTION B-B

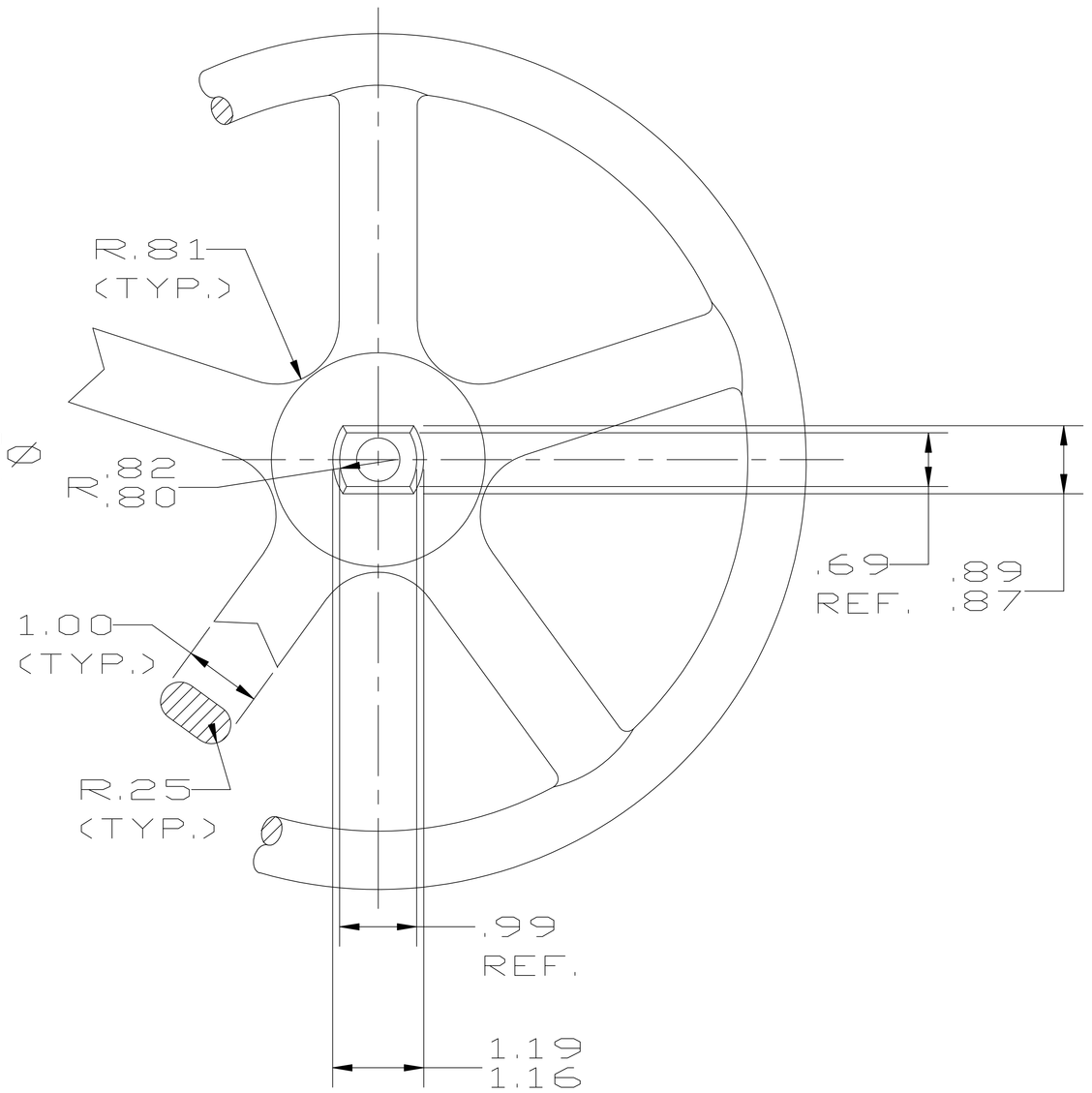

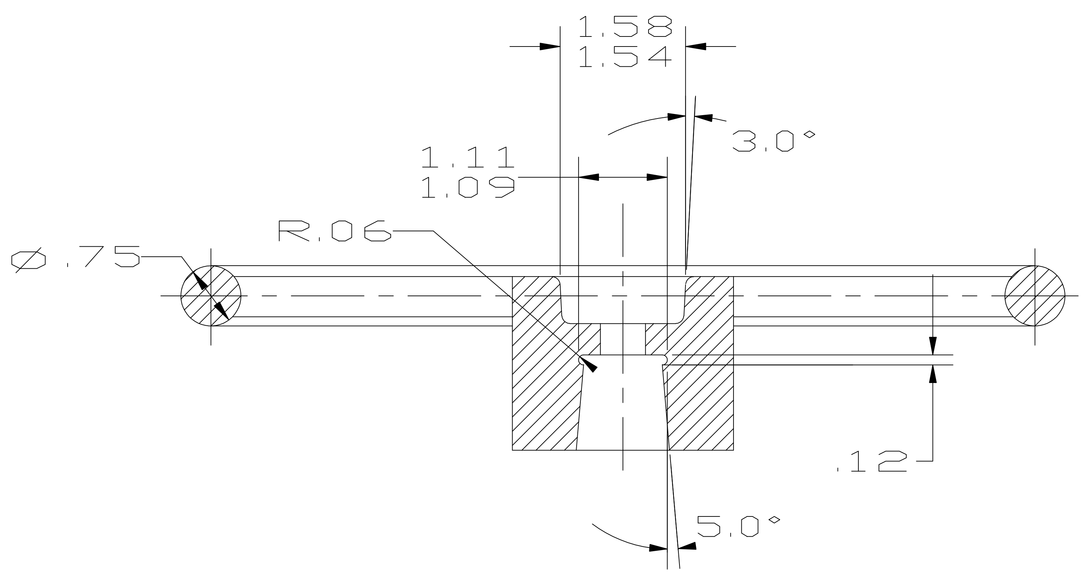

SECTION A-A

ALTERNATE MATERIAL:
DUCTILE IRON ASTM A536-84/MS001

WAS EXP# 156862-1 1/16/95 C&E

DR. BY	C&E	2/8/94	UNLESS OTHERWISE NOTED	THIRD ANGLE PROJECTION	C.B. NO.
CHKR	TRJ	2/8/94	BREAK CAST CORNER(S)--- .12 R		
ENGR	RWV	2/8/94	BREAK MACH CORNER(S)---	PURCH. NO / FINISH RGH	PATT. NO.
MGR			TOLERANCES UNLESS OTHERWISE NOTED		
MFG				REF. NO. 176793-1 148106-1 / SCALE HALF	
TOOL			LINEAR ±.06 / ANGULAR ± 0°-30′		
FDRY				STK. NO.	
MAT'L:	CAST IRON ASTM A126 GRADE B				
C2761 T.J. 1/17/95	Mueller Co.		DESCR. 4IN RW GATE VALVE HANDWHEEL CASTING		NUMBER 156862-1