No.	DESCRIPTION	MATERIAL
1	STEM	LOW LEAD BRASS ALLOY
2	O-RING	EPDM ASTM D2000
3	BALL	LOW LEAD BRASS ALLOY
4	GASKET - SEAL	NITRILE ASTM D2000
5	BODY	CAST LOW LEAD BRASS ALLOY
6	O-RING	EPDM D2000
7	END PIECE	CAST LOW LEAD BRASS ALLOY
8	COPPER GASKET	COPPER SHEET ASTM B152 UNS C11000
9	INSTA-TITE BODY	CAST LOW LEAD BRASS ALLOY
10	O-RING	EP ASTM D2000
11	GRIP RING	CELCON M90 NATURAL CF2001
12	CAP	CAST BRASS ASTM B62 ALLOY C83600
13	PIN	STAINLESS STEEL

SIZE	øA	B	C	D	E
3/4"	.75	3.95	.84	2.12	2.96
1"	1.00	4.87	1.15	2.30	3.45

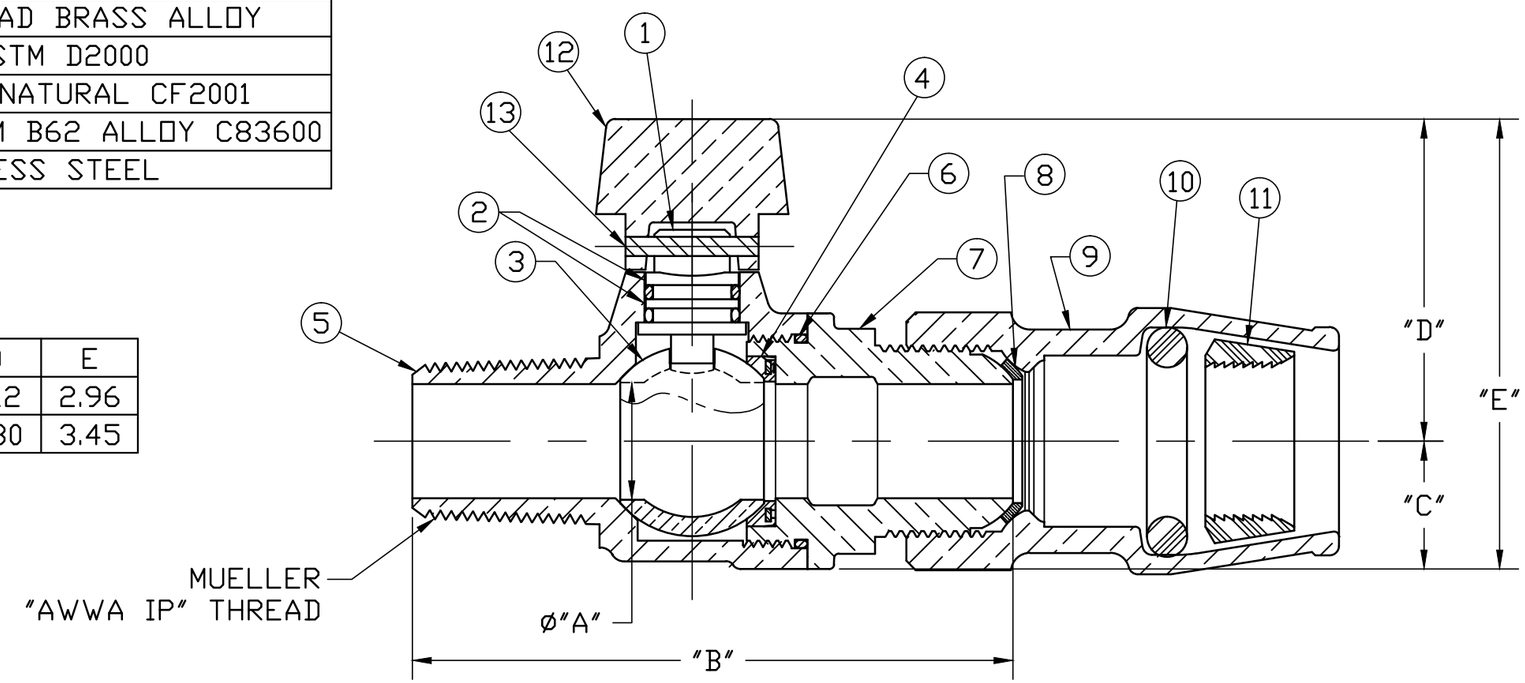

ALL WETTED PARTS ARE LOW LEAD BRASS ALLOY

FILEPATH: PROD-ENG\MUELLER\ASYSUBMITTALS\B2502610N

REV	ECR	DESCRIPTION	DATE	BY	CHKR

PER EST NO: DXXXX EST FIN WT = 0.0000 lbs

DRFTR	RWB	6/26/15
CHKR		
ENGR		
MGR		
	BY	DATE
STK No:		
MAT'L:		

Mueller Co.

UNLESS OTHERWISE NOTED
SURFACE PREPARATION:
BREAK CORNER(S) ---- .000
SURFACE FINISH -- XX RMS
TOLERANCE(S):
LINEAR ---------- ± .000
ANGULAR --------- ± 0°00'

THIRD ANGLE PROJECTION

REF. No.

SCALE NONE

DESCR. BALL LLB CORPORATION VALVE W/ NON-DETACHABLE T-HEAD CAP ("AWWA IP" x IPS PE)

DWG NUMBER B2502610N

TITLE TO AND OWNERSHIP OF THIS ENGINEERING DATA REMAINS IN Mueller Co. NO USE IS TO BE MADE OF THIS DATA EXCEPT AS SPECIFICALLY AUTHORIZED BY Mueller Co. ASSENT ON THE PART OF THE RECIPIENT TO THESE CONDITIONS IS PRESUMED

DWG NUMBER B2502610N

44^2-MRKTG