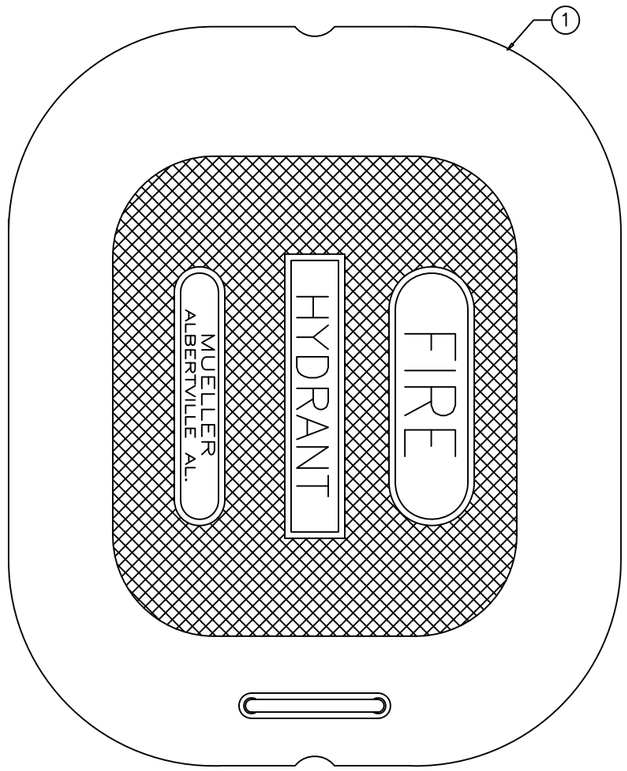

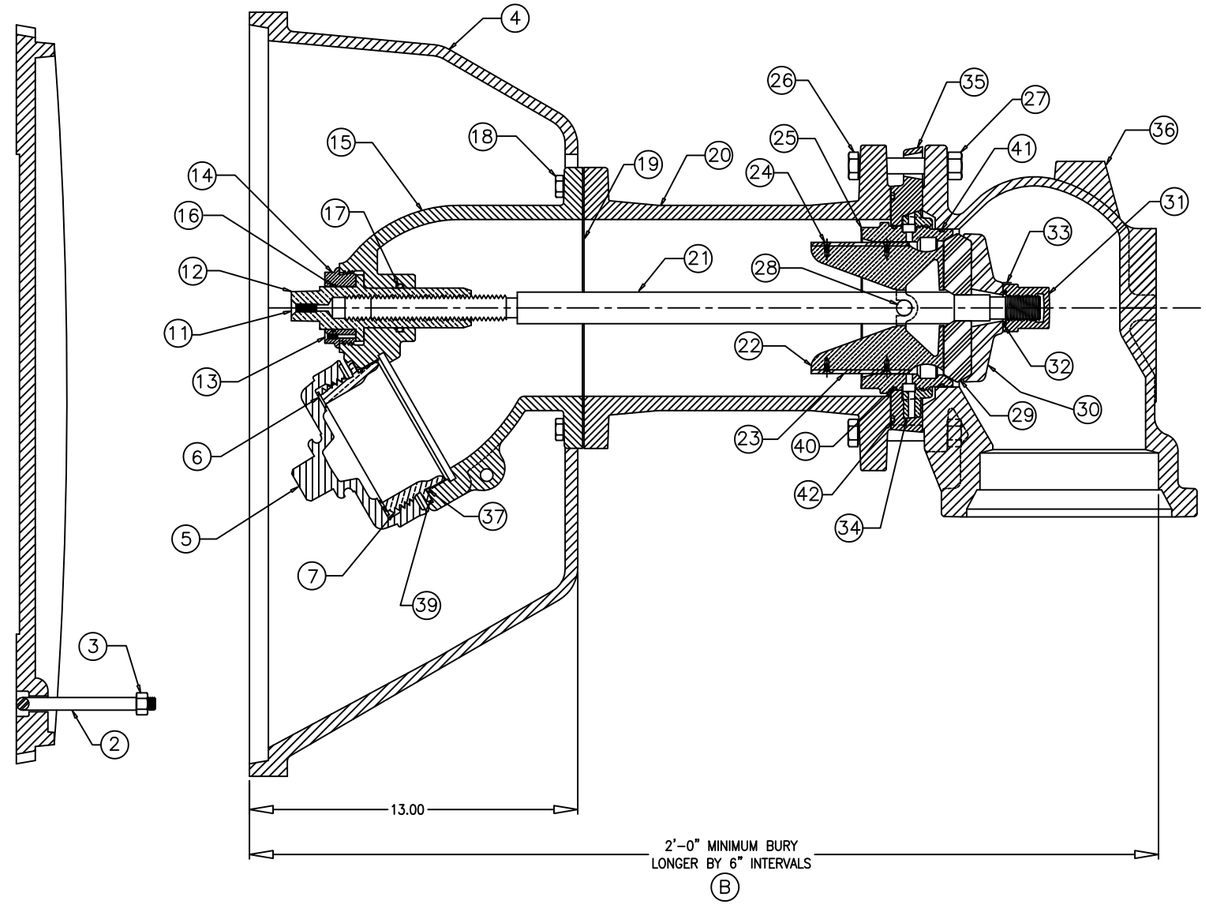

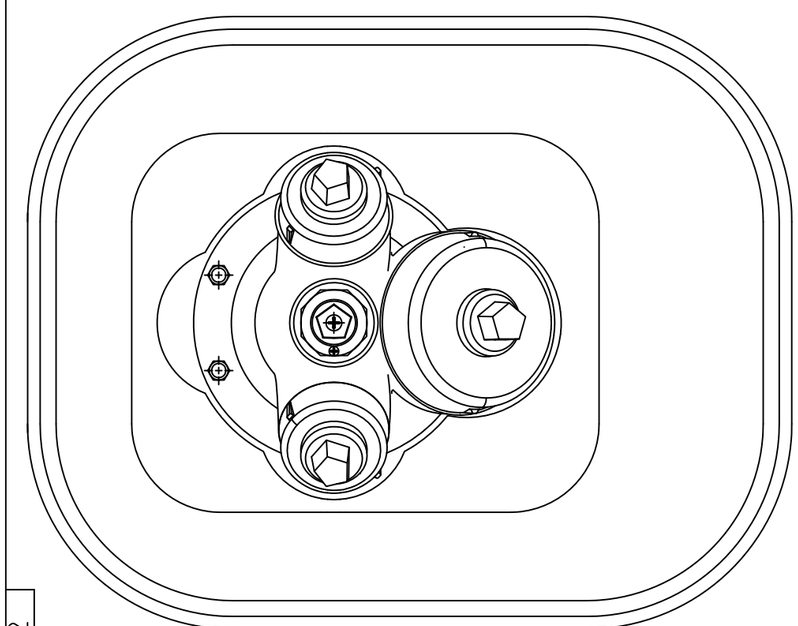

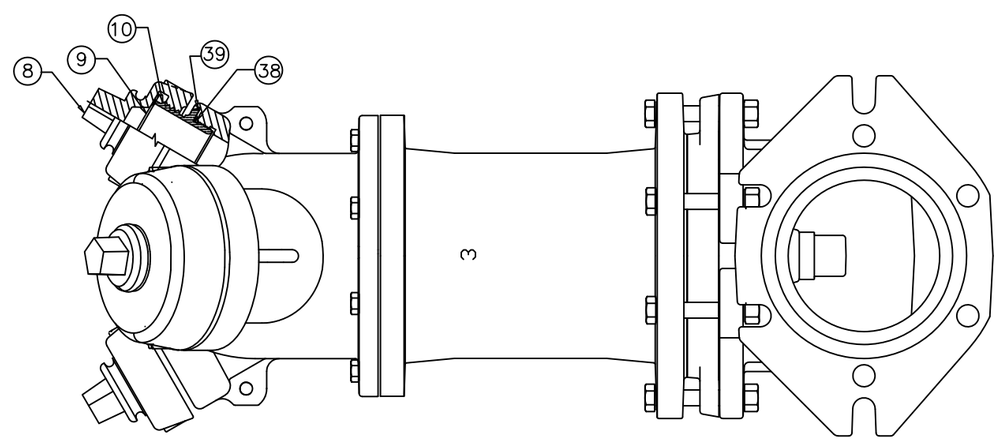

ITEM	DESCRIPTION	NO. REQ'D	MATERIAL	ASTM	
1	COVER	1	CAST IRON	A-126	CLASS B
2	LIFT HANDLE	1	STEEL	A-575	GRADE M1020
3	NUT	2	STEEL		
4	FLUSH BOX	1	CAST IRON	A-126	CLASS B
5	PUMPER CAP	1	CAST IRON	A-126	CLASS B
6	PUMPER GASKET	1	RUBBER	D2000	
7	PUMPER NOZZLE	1	BRONZE	B584	ALLOY C89833
8	HOSE CAP	2	CAST IRON	A-126	CLASS B
9	HOSE GASKET	2	RUBBER	D2000	
10	HOSE NOZZLE	2	BRONZE	B584	ALLOY C89833
11	OIL SCREW	1	BRASS	B-36	ALLOY 8
12	OPERATING NUT	1	BRONZE	B584	ALLOY C89833
13	OIL SCREW	1	BRASS	B-36	ALLOY 8
14	HOLD DOWN NUT	1	BRONZE	B-62	
15	UPPER BARREL	1	CASTIRON	A-126	CLASS B
16	O" RING SEAL	1	RUBBER	D2000	2 BG 715
17	O" RING SEAL	1	RUBBER	D2000	2 BG 715
18	CAP SCREW	8	STEEL		ASA B18.6.2 PLATED
19	BARREL GASKET	2	RUBBER		CLOTH INSERTED
20	LOWER BARREL	1	CAST IRON	A-126	CLASS B
21	STEM	1	STEEL		
22	UPPER VALVE PLATE	1	BRONZE	B584	ALLOY C89833
23	DRAIN VALVE FACING	2	H.D. POLYETHYLENE		LS 5660-00
24	DRAIN VALVE SCREW	4	BRASS	B-36	ALLOY 8
25	SEAT RING	1	BRONZE	B584	ALLOY C89833
26	SHOE BOLT	6	STEEL		ASA B18.6.2 PLATED
27	SHOE NUTS	6	STEEL		
28	STEM PIN	1	STAINLESS STEEL	A276	CLASS B
29	MAIN VALVE	1	RUBBER	D2000	
30	LOWER VALVE PLATE	1	CAST IRON	A-126	CLASS B
31	VALVE NUT	1	CAST IRON	A-126	CLASS B
32	VALVE NUT SEAL	1	RUBBER	D2000	
33	LOCK WASHER	1	STAINLESS STEEL	A-126	302
34	DRAIN RING	1	BRONZE	B-584	
35	DRAIN RING HOUSING	1	CAST IRON	A-126	CLASS B
36	SHOE 6" MJ	1	CAST IRON	A-126	CLASS B
37	PUMPER NOZZLE "O"RING	1	RUBBER	D2000	
38	HOSE NOZZLE "O"RING	2	RUBBER	D2000	
39	NOZZLE LOCK	3	STAINLESS STEEL	A-126	305 OR 410
40	TOP SEAL "O"RING	1	RUBBER	D2000	
41	BOTTOM SEAL "O"RING	1	RUBBER	D2000	
42	O" RING SEAL	1	RUBBER	D2000	

FH-92

REV.	DESCRIPTION	REF.	DRFT'R	CHK'R	APP	DATE
C	REVISED ITEMS 7, 10, 12, 22, 25, &31		JMG			11-7-13
B	CHANGE 3'-0" BURY DIMENSION TO STANDARD BURY NOTE.		ANC			5-27-10
A	REMOVE CHAINS, CHAINS ARE OPTIONAL					

A/O (MILLIMETER) INCH
INITIAL RELEASE
DRFT'R JEH 5-5-98
CHK'R
APP JMG 5-5-98
E.O. NUMBER EO-1547

TOLERANCES – MACHINING
UNLESS OTHERWISE NOTED
BREAK EDGES MACH. .006/.016
FINISH SURFACES 125
FRACTIONS ±1/64
DECIMALS 2 PL ±.025 3 PL ±.005
ANGLES ±1°

THIRD ANGLE PROJECTION
PURCH. FINISH
REF. NO. SCALE NONE
STK. NO.

Mueller Co.
MAT'L.
DESCR. 5-1/4 FLUSH HYD. 2006 STYLE WITH CENT. SHOE
REVISION C
NUMBER FH-92
SHEET 1 OF 1