No.	DESCRIPTION	MATERIAL
1	SPUD	CAST LOW LEAD BRASS ALLOY
2	COPPER TUBE NUT	CAST BRASS ASTM B62 ALLOY C83600
3	FIBER GASKET	ASTM D170 VULCANIZED FIBER

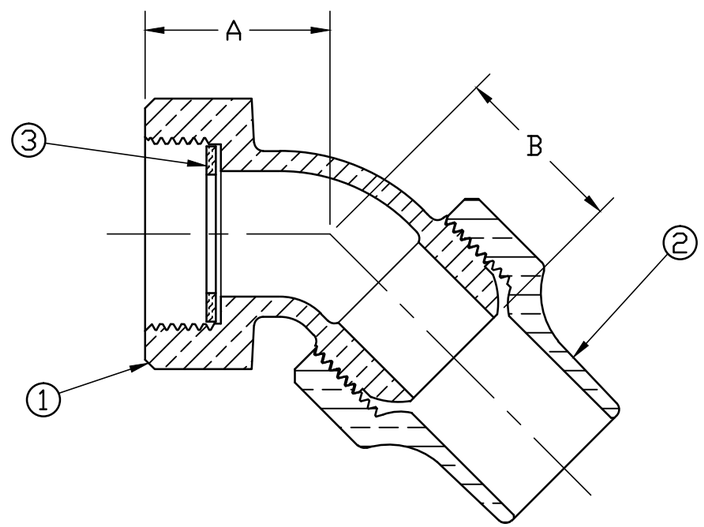

SIZE	A	B
1/2″ × 3/4″	1.281	1.188
5/8″ × 3/4″	1.281	1.188
3/4″	1.219	1.156
3/4″ × 1″	1.250	1.375
1″	1.500	1.375
1″ × 3/4″	1.500	1.281

NOTE: ALL WETTED PARTS ARE LOW LEAD BRASS ALLOY

FILEPATH: PROD-ENG\MUELLER\ASYSUBMITTALS\H15485N

REV	ECR	DESCRIPTION	DATE	BY	CHKR

PER EST NO: DXXXX EST FIN WT = 0.0000 lbs

DRFTR	RWB	6/24/15
CHKR		
ENGR		
MGR		
	BY	DATE
STK No:		

Mueller Co.

UNLESS OTHERWISE NOTED
SURFACE PREPARATION:
BREAK CORNER(S) ---- .000
SURFACE FINISH -- XX RMS
TOLERANCE(S):
LINEAR ---------- ± .000
ANGULAR --------- ± 0°00′

THIRD ANGLE PROJECTION

REF. No.

SCALE FULL

MAT'L:

DESCR. LLB 1/8 BEND CORP STOP COUPLING (I/S MUELLER × CS)

DWG NUMBER H15485N

TITLE TO AND OWNERSHIP OF THIS ENGINEERING DATA REMAINS IN Mueller Co. NO USE IS TO BE MADE OF THIS DATA EXCEPT AS SPECIFICALLY AUTHORIZED BY Mueller Co. ASSENT ON THE PART OF THE RECIPIENT TO THESE CONDITIONS IS PRESUMED

DWG NUMBER H15485N

44^2-MRKTG