No.	DESCRIPTION	MATERIAL
1	SPUD	CAST LOW LEAD BRASS ALLOY
2	COUPLING NUT	CAST BRASS ASTM B62 ALLOY C83600

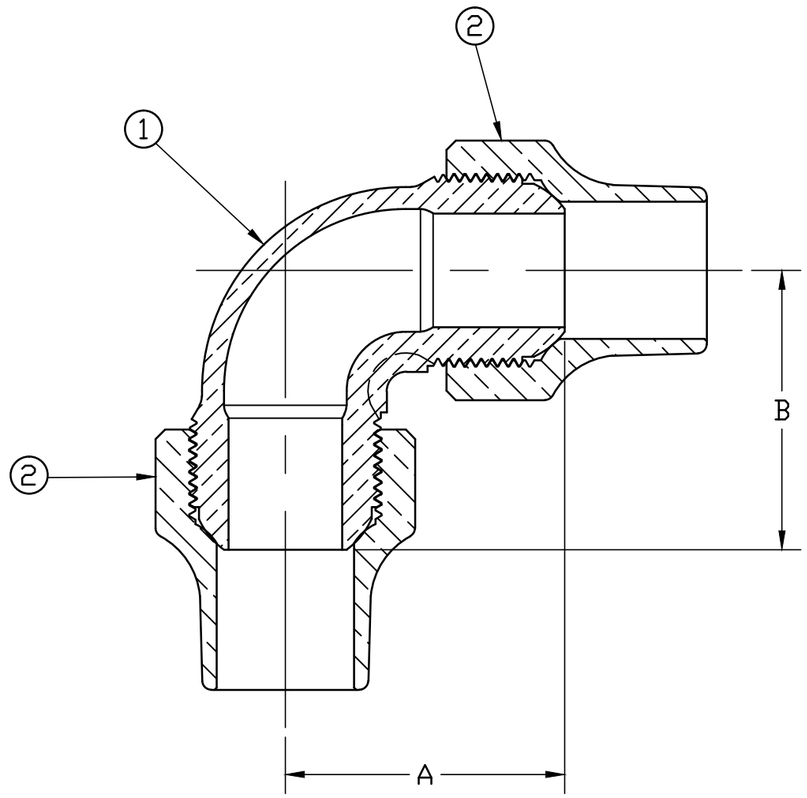

SIZE	DIM A	DIM B
3/4″	1.84	1.84
3/4″ x 1″	2.00	2.00
1″	2.06	2.06
1-1/2″	3.25	3.25
2″	4.00	4.00

NOTE: ALL WETTED PARTS ARE LOW LEAD BRASS ALLOY

FILEPATH: PROD-ENG\MUELLER\ASYSUBMITTALS\H15525N

REV	ECR	DESCRIPTION	DATE	BY	CHKR

PER EST NO: DXXXX EST FIN WT = 0.00000 lbs

	BY	DATE
DRFTR	RWB	7/11/13
CHKR		
ENGR		
MGR		

STK No:

MAT'L:

DESCR. QUARTER BEND LLB COUPLING CS x CS

Mueller Co.

UNLESS OTHERWISE NOTED
SURFACE PREPARATION:
BREAK CORNER(S) ---- .000
SURFACE FINISH -- XX RMS
TOLERANCE(S):
LINEAR ---------- ± .000
ANGULAR --------- ± 0°00′

THIRD ANGLE PROJECTION

REF. No.

SCALE FULL

DWG NUMBER H15525N

DWG NUMBER H15525N

44^2-MRKTG

TITLE TO AND OWNERSHIP OF THIS ENGINEERING DATA REMAINS IN Mueller Co. NO USE IS TO BE MADE OF THIS DATA EXCEPT AS SPECIFICALLY AUTHORIZED BY Mueller Co. ASSENT ON THE PART OF THE RECIPIENT TO THESE CONDITIONS IS PRESUMED