Rev. 5-15 Shaded area indicates changes

MUELLER® LINESEAL III® BUTTERFLY VALVES CLASS 150B 4"-48" - M.J. ENDS

Dimensions - for Lineseal III Valves M.J. Ends, 4"-20" Sizes.

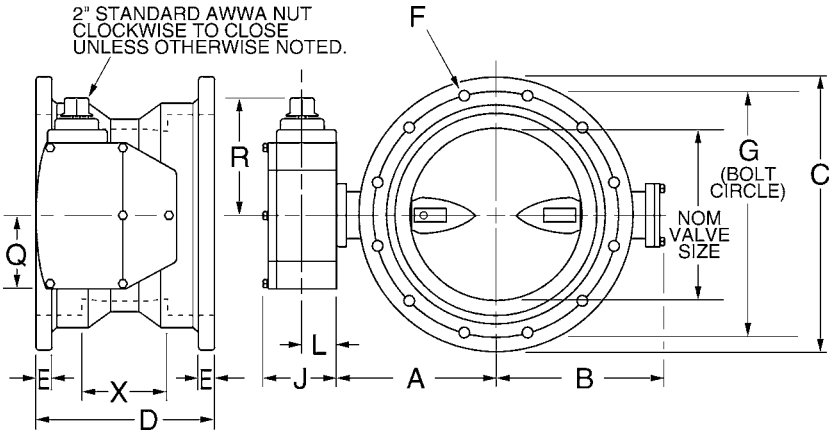

Dimensions - for Mueller Lineseal III Butterfly Valves M.J. Ends, 24"-48" Sizes.

CAUTION

When using 10" and 12" Valves on Class 200 PVC Pipe, pipe end I.D.must be bevelled to ensure clearance for disc and proper valve operation. Contact your Mueller Sales Representative for detailed instructions.

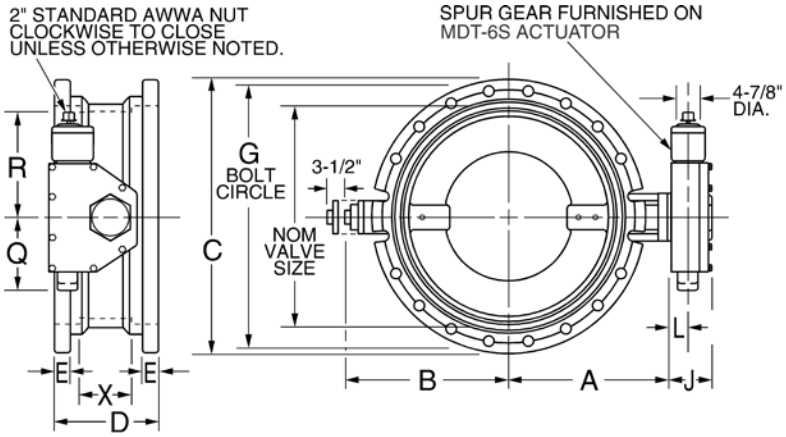

Notes: These dimensions are correct at time of publication but are not to be construed as certified drawings. Certified drawings available upon request. Actuator size subject to change based on actual pipeline conditions.

Dimension+	Nominal size													
	4"	6"	8"	10"	12"	14"	16"	18"	20"	24"	30"	36"	42"	48"
A	5.50	6.50	7.75	9.00	10.50	11.88	13.50	14.38	16.00	18.63	21.50	25.44	29.88	34.06
B	4.13	5.13	6.50	9.75	11.38	12.75	14.50	15.38	17.00	18.38	24.13	28.00	32.75	36.88
C	9.00	11.00	13.25	15.56	17.94	20.31	22.56	24.69	27.09	31.56	39.00	45.88	53.00	59.88
D	8.13	8.50	8.63	9.25	9.25	11.50	12.00	12.25	12.50	13.25	18.00	22.00	22.00	24.00
E	1.00	1.06	1.13	1.19	1.25	1.31	1.38	1.38	1.50	1.63	1.81	2.00	2.00	2.00
F (number and size of holes)	4--.75	6--.75	6--.75	8--.75	8--.875	10--.875	12--.875	12--.875	14--.875	16--.875	20--1.13	24--1.13	28--1.38	32--1.38
G	7.50	9.50	11.75	14.00	16.25	18.75	21.00	23.25	25.25	30.00	36.88	43.75	50.63	57.50
J	4.69	4.69	4.69	4.69	4.69	5.63	5.63	6.38	6.38	6.38	7.56	7.56	8.31	11.19
L	2.00	2.00	2.00	2.00	2.00	2.44	2.44	2.84	2.84	2.84	3.47	3.47	3.94	5.06
Q	4.50	4.50	4.50	4.50	4.50	5.44	5.44	6.75	6.75	6.75	10.13	10.13	15.94	18.56
R	8.25	8.25	8.25	8.25	8.25	10.38	10.38	11.31	11.31	11.31	17.00	17.00	19.88	26.50
X	3.12	3.50	3.63	4.25	4.25	4.50	5.00	5.25	5.50	6.38	10.00	14.00	14.00	16.00
Turns to open	32	32	32	32	32	30	30	40	40	40	44	44	136	215
Actuator (see notes)	MDT-2S	MDT-2S	MDT-2S	MDT-2S	MDT-2S	MDT-3S	MDT-3S	MDT-4S	MDT-4S	MDT-4S	MDT-5	MDT-5	MDT-5S	MDT-6S

+ All dimensions are in inches.