No.	QTY.	DESCRIPTION	MATERIAL
1	1	STEM	LOW LEAD BRASS ALLOY
2	2	O-RING	EPDM D2000
3	1	BALL	LOW LEAD BRASS ALLOY
4	1	GASKET - SEAL	NITRILE D2000
5	1	BODY	CAST LOW LEAD BRASS ALLOY
6	1	O-RING	EPDM D2000
7	1	END PIECE	CAST LOW LEAD BRASS ALLOY
8	1	PJ CTS GSKT	BUNA N ASTM D2000
9	1	PJ WASHER	POLYPROPYLENE
10	1	CLPG NUT SUB	CAST BRASS ASTM B62 ALLOY C83600

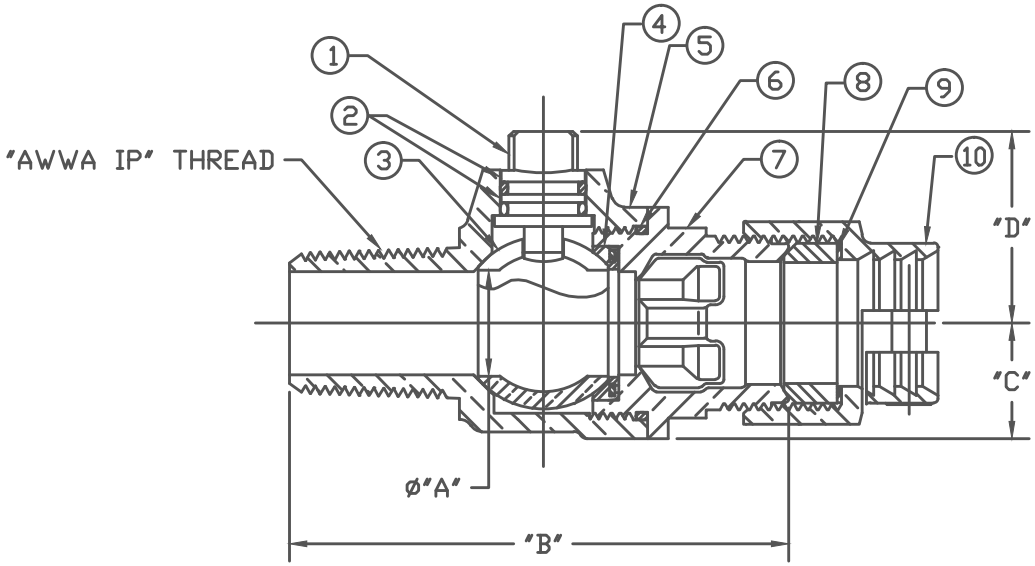

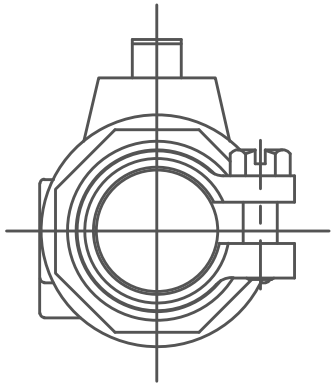

SIZE	øA	B	C	D
3/4	.75	3.62	.84	1.36
3/4x1	.75	3.86	.84	1.39
1	1.00	4.65	1.15	1.56
1-1/2	1.50	5.16	1.50	2.12
2	2.00	5.61	1.82	2.44

NOTE: ALL WETTED PARTS ARE LOW LEAD BRASS ALLOY

FILEPATH: PROD-ENG\MUELLER\ASYSUBMITTALS\P25028N

REV	ECR	DESCRIPTION	DATE	BY	CHKR

PER EST NO: DXXXX EST FIN WT = 0.0000 lbs

DRFTR	JGarvin	10/4/11
CHKR		
ENGR		
MGR		
	BY	DATE
STK No:		
MAT'L:		

Mueller Co.

UNLESS OTHERWISE NOTED
SURFACE PREPARATION:
BREAK CORNER(S) ---- .000
SURFACE FINISH -- XX RMS
TOLERANCE(S):
LINEAR ---------- ± .000
ANGULAR --------- ± 0°00'

THIRD ANGLE PROJECTION

REF. No.

SCALE NONE

DESCR. CORPORATION STOP BALL VALVE
LOW LEAD BRASS("AWWA IP" x PJ CTS)

PART NUMBER P25028N

PART NUMBER P25028N

44²-MRKTG