# MUELLER® CC-25™ DRILLING✷ MACHINE REPAIR PARTS

Mueller Co.



Rev. 4-01

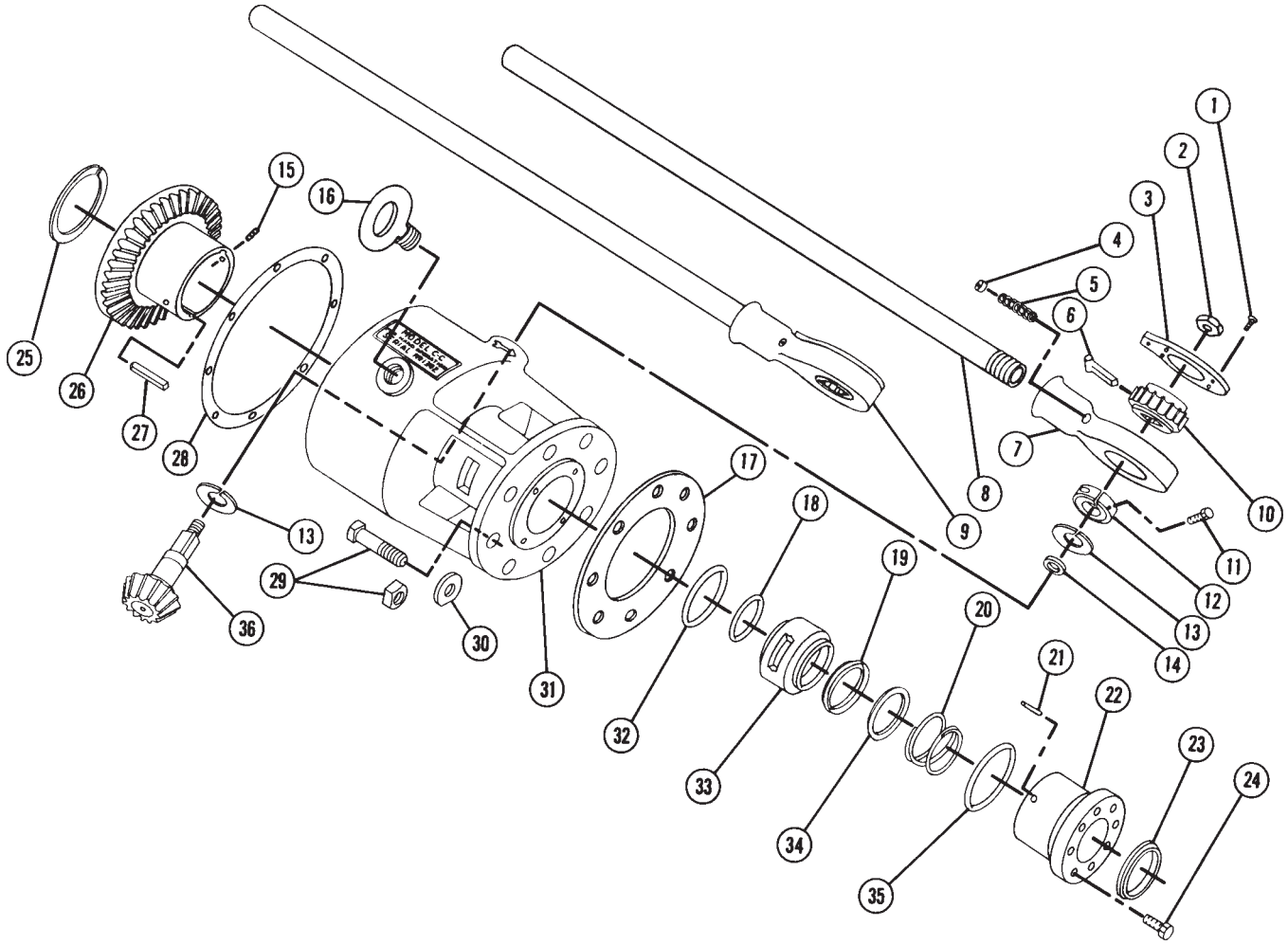


NOTE: These illustrations are for parts identification only. DO NOT use these illustrations for assembly or disassembly of machine. MUELLER CO. offers a machine repair service. Contact MUELLER® Customer Service Center for details.

**✷THE "CC-25" MACHINE IS NO LONGER AVAILABLE; UNTIL FURTHER NOTICE, MUELLER WILL CONTINUE TO PROVIDE SPARE PARTS FOR THIS PRODUCT. CONTACT YOUR MUELLER REPRESENTATIVE ABOUT OTHER MACHINES THAT PERFORM WITHIN THE SPECIFICATIONS OF THIS MACHINE.**

| Item No. | Part Number | Part Name | Item No. | Part Number | Part Name | Item No. | Part Number | Part Name |
|---|---|---|---|---|---|---|---|---|
| 1 | 52207 | Screw | 13 | 63842 | Thrust washer | 25 | 54426 | Thrust washer |
| 2 | 46029 | Nut | 14 | 508431 | Oil seal | 26 | 63844 | Bevel gear |
| 3 | 63851 | Plate | 15 | 90472 | Set screw | 27 | 54467 | Key |
| 4 | 56039 | Spring screw | 16 | 63846 | Eyebolt plug | 28 | 55609 | Gasket |
| 5 | 56774 | Spring | 17 | 55449 | Gasket | 29 | 56682 | Bolt & nut |
| 6 | 581959 | Dog | 18 | 508430 | Boring bar seal | 30 | 55409 | Washer |
| 7 | 57655 | Body | 19 | 45115 | Packing ring | 31 | 508428 | Drive box |
| 8 | 56632 | Handle bar | 20 | 98000 | Spring | 32 | 508429 | Drive box seal |
| 9 | 88148 | Handle complete | 21 | 47092 | Rollpin | 33 | 508427 | Seal retainer & spacer |
| 10 | 55790 | Wheel | 22 | 501151 | Packing gland | 34 | 44245 | Convex follower |
| 11 | 92754 | Allen screw | 23 | 501158 | Wiper ring | 35 | 52162 | Gland seal |
| 12 | 63848 | Collar | 24 | 55098 | Cap screw | 36 | 63845 | Bevel pinion |

**TO ORDER SPECIFY QUANTITY, PART NUMBER AND PART NAME (include catalog number and model number of machine).**