14", 16" A-2361 D.I. RESILIENT WEDGE GATE VALVE - SL. x FL.

Rev. 2-06 Shaded area indicates change.

- ❑ Catalog number–
  A-2361-41 Slip-on† end (with gasket) x flange end
  A-2361-43 Slip-on† end (less gasket) x flange end
- ❑ Sizes – 14", 16"
- ❑ Meets or exceeds all applicable requirements of ANSI/AWWA C515 Standard, UL Listed, FM Approved, and certified to ANSI/NSF 61.
- ❑ Slip-on ends fit plain end of classes 50 and 100 cast iron; ductile iron and AWWA C905 cast iron O.D. PVC
- ❑ Flanged end dimensions and drilling comply with ANSI B16.1, class 125
- ❑ Ductile iron body and bonnet with nominal 10 mils MUELLER® Pro-Gard™ Fusion Epoxy Coating interior and exterior surfaces
- ❑ Epoxy coating meets or exceeds all applicable requirements of ANSI/AWWA C550 Standard and is certified to ANSI/NSF 61
- ❑ Ductile iron wedge, symmetrical & fully encapsulated with molded rubber; no exposed iron
- ❑ Non-rising stem (NRS)
- ❑ Triple O-ring seal stuffing box (2 upper & 1 lower O-ring)
- ❑ 2" square wrench nut (optional bevel or spur gearing) – open left or open right
- ❑ 250 psig (1723 kPa) maximum working pressure, 500 psig (3447 kPa) static test pressure
- ❑ UL Listed, FM Approved – 250 psig (1723 kPa)

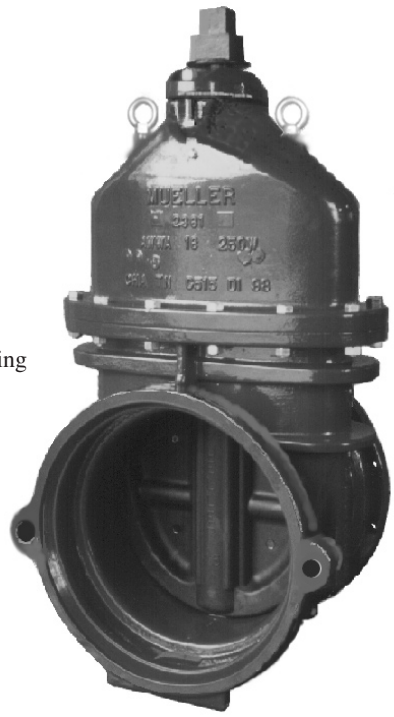

A-2361-43

†Design and dimensions of the joint are manufactured under license of U.S. Pipe and Foundry Company.

Options

See page 10.40 for more information on Resilient Wedge Gate Valve options

- ❑ Position indicators
- ❑ ASTM B98-C66100/H02 stem
- ❑ Stainless steel fasteners: Type 304, Type 316
- ❑ Handwheel
- ❑ Spur or bevel geared actuator

Resilient wedge gate valve parts

Catalog Part No.	Description	Material	Material standard
G-16	Bonnet Bolts & Nuts	Carbon Steel	ASTM A307 Grade B, Zinc Plated
G-41	Stuffing Box Bolts & Nuts	Carbon Steel	ASTM A307 Grade B, Zinc Plated
G-49	Stem O-rings (3)	Rubber	
G-200	Wrench Nut Cap Screw	Carbon Steel	ASTM A307 Grade B, Zinc Plated
G-201	Stuffing Box Seal	Rubber	
G-202	Wrench Nut	Cast Iron	ASTM A126 CL.B
G-203	Stem	Bronze	ASTM B138
G-204	Hand Wheel (not shown)	Cast Iron	ASTM A126 CL.B
G-205	Stem Nut	Bronze	ASTM B62
G-206	Guide Cap Bearings	Celcon	
G-207	Stuffing Box	Ductile Iron	ASTM A536
G-208	Anti-friction Washers (2)	Brass	
G-209	Wedge, Rubber Encapsulation	Ductile Iron* SBR	ASTM A536 --
G-210	Bonnet	Ductile Iron	ASTM A536
G-211	Bonnet O-ring	Rubber	
G-212	Body	Ductile Iron	ASTM A536

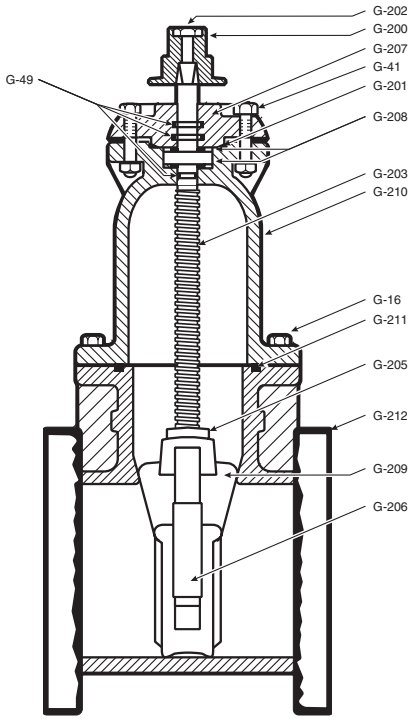

* Fully encapsulated in molded rubber with no iron exposed

SEE PAGE 10.43 FOR ORDERING INSTRUCTIONS