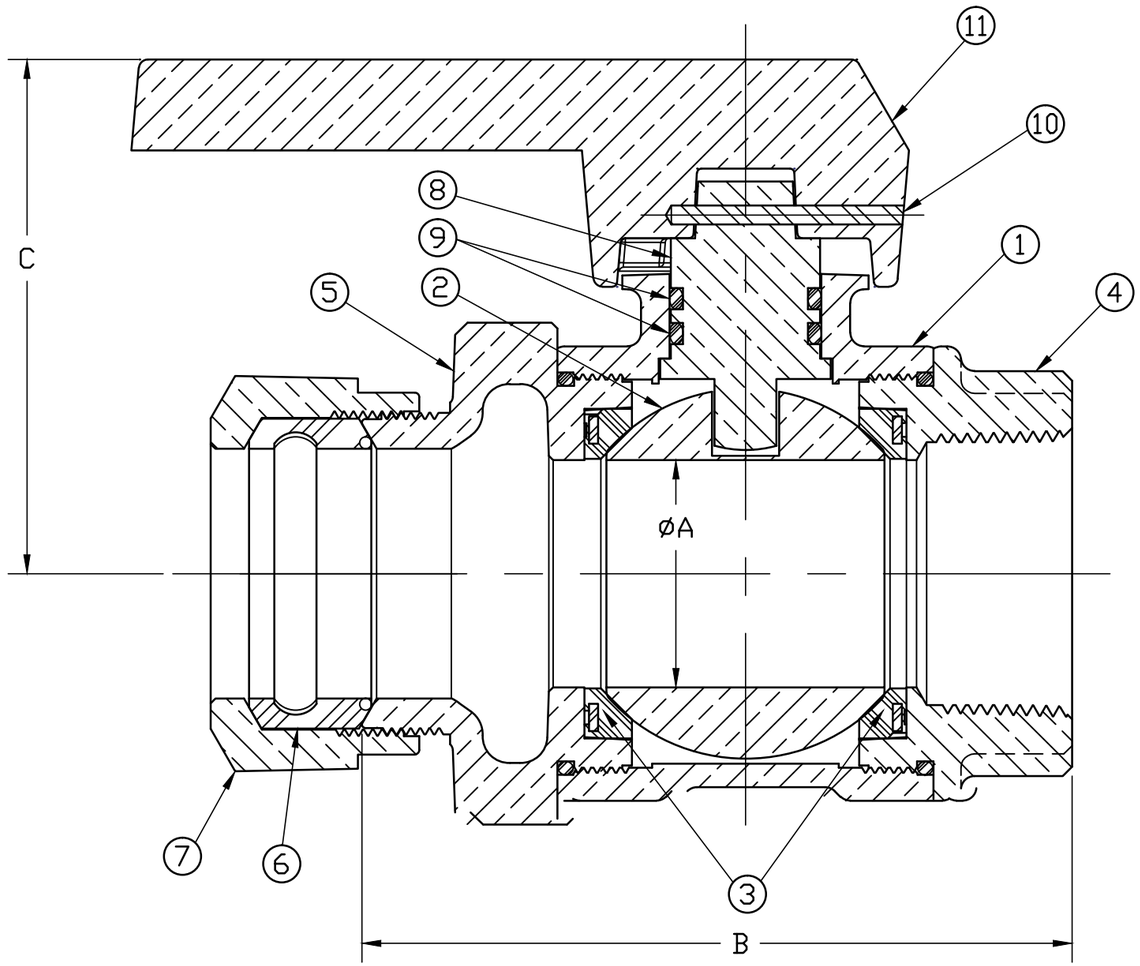

No.	DESCRIPTION	MATERIAL
1	BODY	CAST LOW LEAD BRASS ALLOY
2	BALL	LOW LEAD BRASS ALLOY
3	GASKET - SEAL	NITRILE D2000
4	END PIECE	CAST LOW LEAD BRASS ALLOY
5	END PIECE	CAST LOW LEAD BRASS ALLOY
6	CTS GASKET	ASTM D2000 & 410 STAINLESS STEEL
7	CONN. NUT	CAST BRASS ASTM B62 ALLOY C83600
8	STEM	LOW LEAD BRASS ALLOY
9	O-RING	EPDM D2000
10	ROLLPIN	A240 STAINLESS STEEL
11	INTEGRAL HANDLE	CAST BRASS ASTM B62 ALLOY C83600

SIZE	ØA	B	C	D
1-1/2"	1.500	4.688	3.393	4.000
2"	2.000	5.241	3.696	4.000

ALL WETTED PARTS ARE LOW LEAD BRASS ALLOY

FILEPATH: PROD-ENG\MUELLER\ASYSUBMITTALS\B2517236N

REV	ECR	DESCRIPTION	DATE	BY	CHKR

PER EST NO: DXXXX EST FIN WT = 0.0000 lbs

DRFTR	RWB	1/2/18
CHKR		
ENGR		
MGR		
	BY	DATE

STK No:

MAT'L:

DESCR. INLINE LLB CURB BALL VALVE W/ INTEGRAL HANDLE (110 CTS x FIP)

Mueller Co.

UNLESS OTHERWISE NOTED
SURFACE PREPARATION:
BREAK CORNER(S) ---- .000
SURFACE FINISH -- XX RMS
TOLERANCE(S):
LINEAR ---------- ± .000
ANGULAR --------- ± 0°00'

THIRD ANGLE PROJECTION

REF. No.

SCALE NONE

DWG NUMBER B2517236N

TITLE TO AND OWNERSHIP OF THIS ENGINEERING DATA REMAINS IN Mueller Co. NO USE IS TO BE MADE OF THIS DATA EXCEPT AS SPECIFICALLY AUTHORIZED BY Mueller Co. ASSENT ON THE PART OF THE RECIPIENT TO THESE CONDITIONS IS PRESUMED

DWG NUMBER B2517236N

44^2-MRKTG