ITEM NO	PART NUMBER	QTY	DESCRIPTION	MATERIAL
1	311981	1	ABS PLATFORM 18-40	PLASTIC VIRGIN POLYLAC, PA747 ABS BLACK RESIN OR PROOFED EQUIVALENT RESIN
2	548694	1	3/4" METER JUMPER	SCH 80 PVC PIPE
3	700013	4	3/4" HOSE CONNECTOR	RED BRASS ASTM B43 ALLOY C23000 O61 TEMPER ANNEALED
4	700035-1560	2	3/4" COIL PART	PB 2110 CL 250 SDR-9 ASTM D2666
5	780021-1860	1	SHELL SUB ASSEMBLY	SDR-51 PVC PIPE ASTM D2241 GRADE 1120
6	790006	8	3/4" HEX NUT	BRASS ASTM B16 ALLOY C36000
7	790018-TR175	1	18" FLAT LID W/ 1-3/4" TR HOLE (SOLD SEPARATELY)	CAST IRON ASTM A126 CLASS B
8	790153	1	18" INSULATION PAD (SOLD SEPARATELY)	ETHAFOAM 220 WHITE OR POLYLAM 1.7 DENSITY WHITE
9	215B24265N	2	5/8" X 3/4" FULL PORT BALL VALVE	LEAD FREE BRASS ALLOY ASTM B584 C89833/C87850

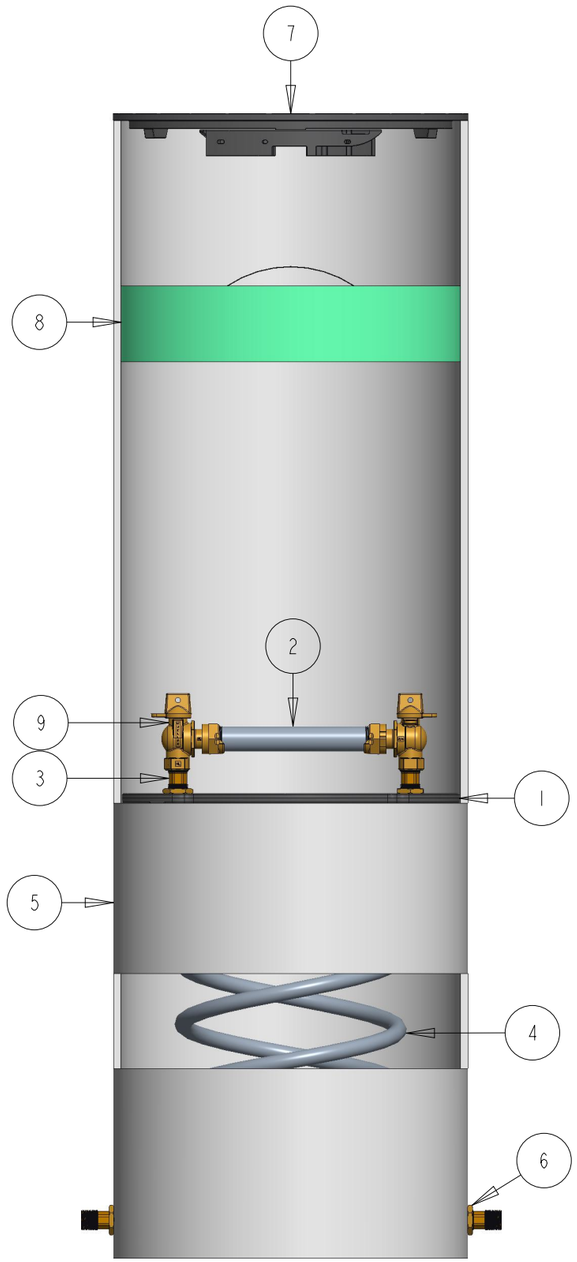

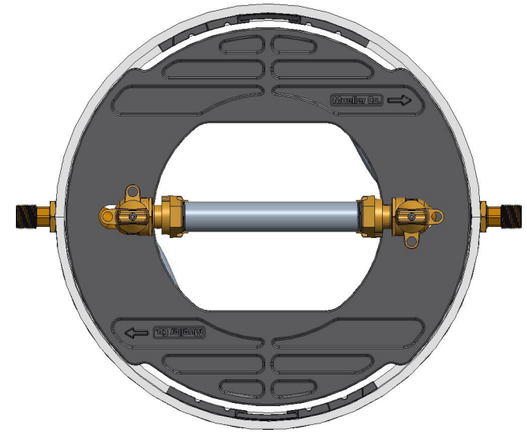

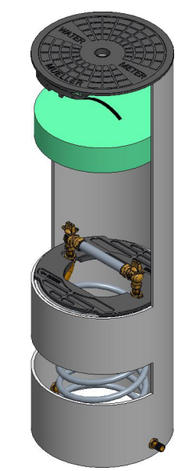

REVISIONS					
REV	ECR	DESCRIPTION	DRAWN BY	DATE	APPROVED
B		UPDATED DRAWING FORMAT ADDED MATERIAL INFORMATION	AOS	6/03/25	

INTERPRET THIS DRAWING IN ACCORDANCE WITH ASME Y14.5 2018

UNLESS OTHERWISE SPECIFIED DIMENSIONS ARE IN INCHES. MACHINING TOLERANCES:

.X ±.1
.XX ±.015
.XXX ±.005

ANGULAR ±1°
CORNER BREAK .015/.025
FINISH 125 µin. RA

	NAME	DATE
DRAWN BY	DWS	Dec-10-18
D.E. APPR.		
M.E. APPR.		
Q.A. APPR.		

DO NOT SCALE DRAWING

= CRITICAL ( ) = REFERENCE

THIRD ANGLE PROJECTION

MUELLER

TITLE:

3/4" COIL SINGLE METER PIT
18" DIA X 60" DEEP
LEAD FREE BRASS

SIZE	DWG. NUMBER	REV
B	250CS1860FSBSN	B

MATERIAL:

STK NUMBER: REF.NO. SCALE: 0.056 WT: SHEET 1 OF 1

TITLE TO AND OWNERSHIP OF THIS ENGINEERING DATA REMAINS IN Mueller Co. ASSENT ON THE PART OF THE RECIPIENT TO THESE CONDITIONS IS PRESUMED.