ITEM	DESCRIPTION	PART NO.	REQ'D
1	1" LOCKWING FULL PORT BALL VALVE	B24265N	2
2	1" METER COUPLING	H14210N	2
3	21" SHELL SUB-ASSEMBLY		1
4	STABILIZING BRACKETS		4
5	1" HEX NUT		6
6	1" X 1" X 1" TEE		1
7	1" STREET ELBOW		2
8	21" ALUMINUM BOTTOM		1
9	CAST IRON SIDE LOCKING LID (OPTIONAL)	282925	---
10	CAST IRON FRAME (OPTIONAL)	700098-1	---
11	21" X 4" INSULATING PAD (OPTIONAL)	790322	---
12	METER (NOT INCLUDED)		---

*NOTE: METER NOT INCLUDED

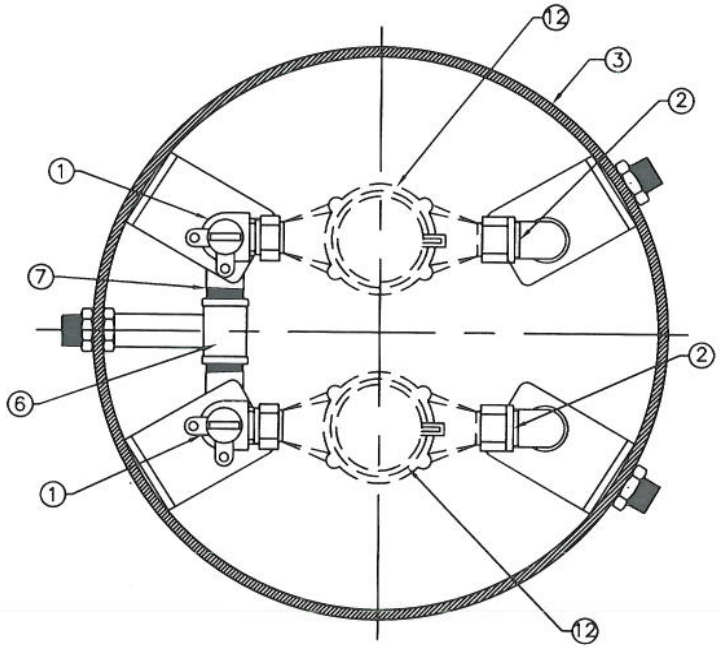

TOP VIEW

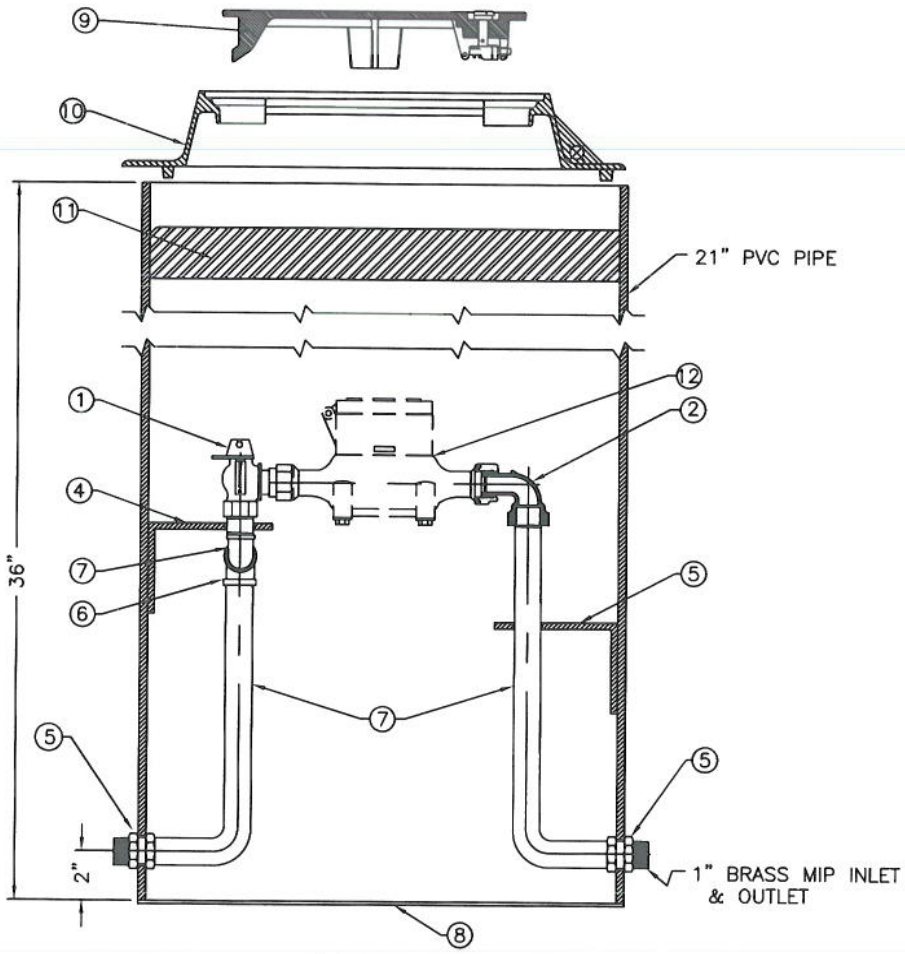

SIDE VIEW

330RD2136FAASN

REV.	DESCRIPTION	REF.	DRFT'R	CHK'R	APP	DATE

DRFT'R	BBF	8/9/16	THIRD ANGLE PROJECTION	REF. NO.	SCALE NONE
CHK'R					
E.O. NUMBER				STOCK No.	
Mueller Co.			DESCR. 1" RIGID DOUBLE METER PIT 21" DIA X 36" DEPTH LOW LEAD BRASS	REV.	NUMBER 330RD2136FAASN
					SHEET 1 OF 1