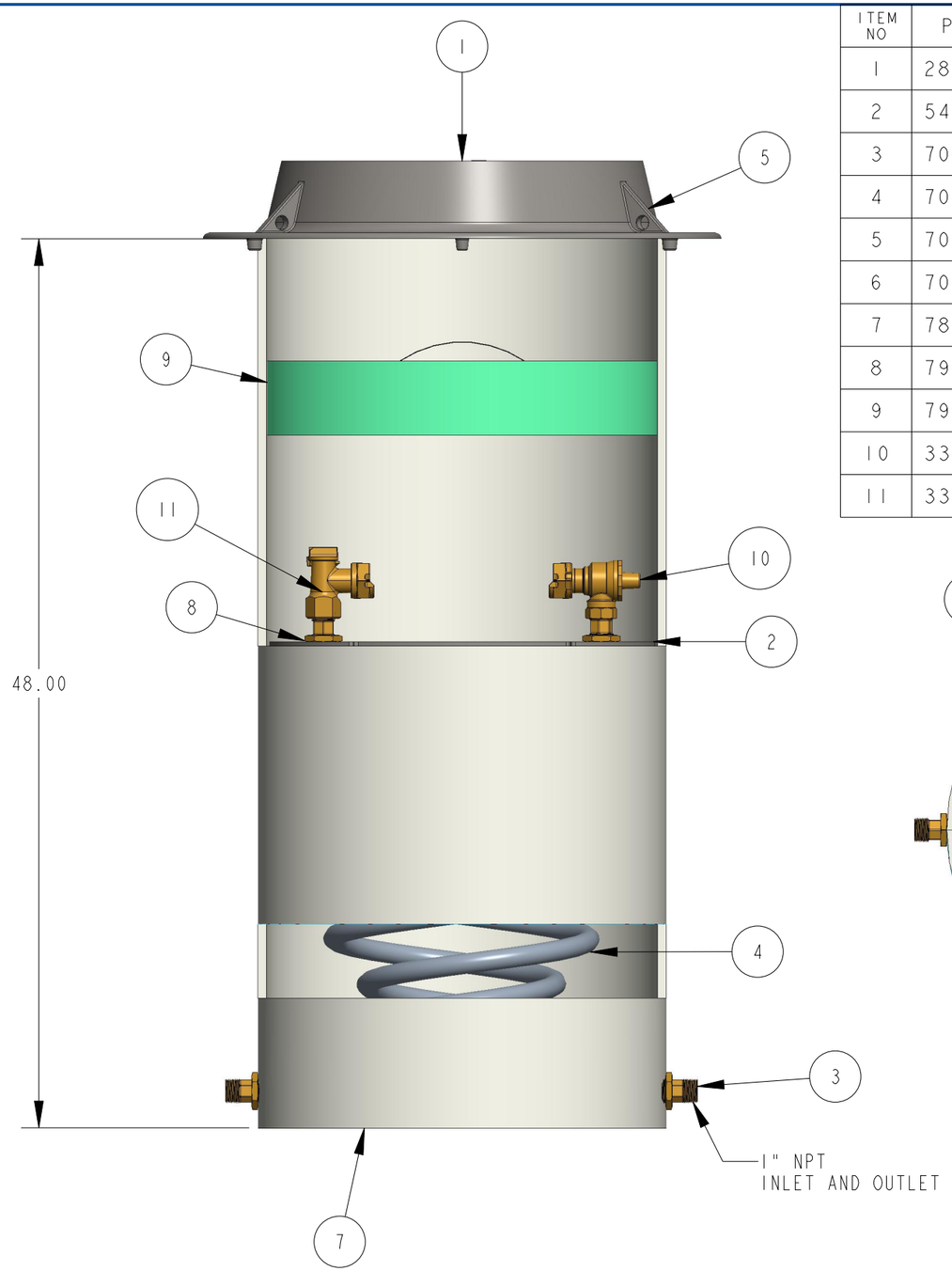

ITEM NO	PART NUMBER	QTY	DESCRIPTION	MATERIAL
1	282925	1	18" DIA CAST IRON SIDE LOCKING LID (SOLD SEPARATELY)	CAST IRON ASTM A126 CLASS B
2	546132	1	STEEL PLATFORM	RILSAN COATED ASTM A36 CARBON STEEL
3	700014	4	1" HOSE CONNECTOR	RED BRASS ASTM B43 ALLOY C23000 O61 TEMPER ANNEALED
4	700046-1848	2	1" COIL PART	POLYBUTYLENE RESIN BASELL AKOALIT PB4267 OR 4237 GREY
5	700098-1	1	CAST IRON FRAME (PURCHASED SEPARATELY)	CAST IRON ASTM A48 CLASS 25A
6	700261	1	REINFORCING RING	SDR-51 PVC PIPE ASTM D2241 GRADE 1120
7	780058-2148	1	SHELL SUB ASSEMBLY	SDR-51 PVC PIPE ASTM D2241 GRADE 1120
8	790010	8	1" HEX NUT	ASTM B16 ALLOY C36000
9	790322	1	21" X 4" EZ INSULATING PAD (ORDER SEPARATELY)	ETHAFOAM 220 WHITE OR POLYLAM 1.7 DENSITY WHITE
10	330H14244N	1	1" DUAL CHECK VALVE	LEAD FREE BRASS ALLOY ASTM B584 C89833/C87850
11	330H14265	1	1" ANGLE METER STOP VALVE	LEAD FREE BRASS ALLOY ASTM B584 C89833/C87850

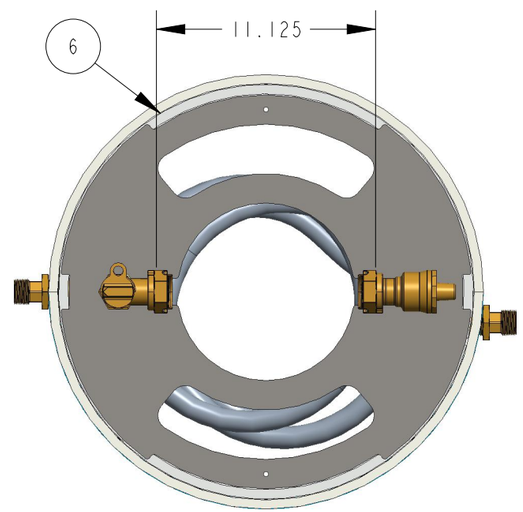

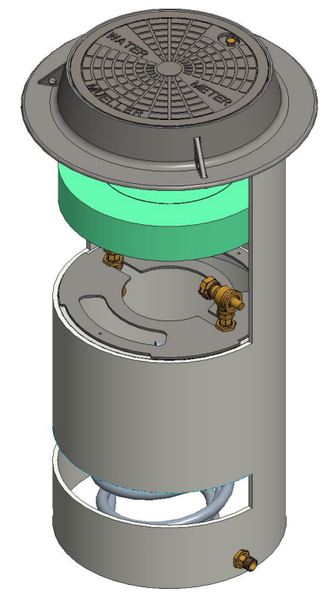

330CS2148LBBSN

DR. BY	JBK	9/1/23	UNLESS OTHERWISE NOTED	THIRD ANGLE PROJECTION	C.B. NO.
CHKR			BREAK CAST CORNER(S)---		
ENGR			BREAK MACH CORNER(S)---	PURCH. / FINISH	PATT. NO.
MGR			TOLERANCES UNLESS OTHERWISE NOTED		
MFG				REF. NO. / SCALE NONE	
TOOL			LINEAR ± / ANGULAR ±		
FDRY				STK. NO.	
MAT'L:					

MUELLER

DESCR. 1" COIL SINGLE METER PIT 21" DIA X 48" DEPTH LEAD FREE BRASS

NUMBER 330CS2148LBBSN