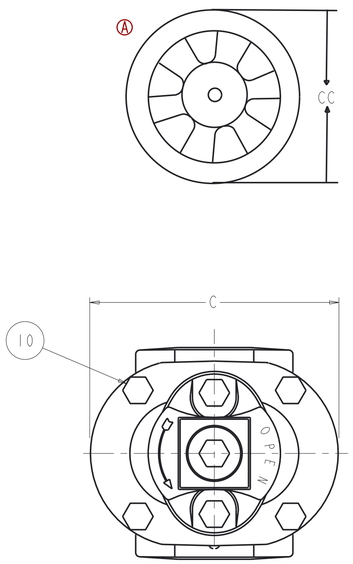

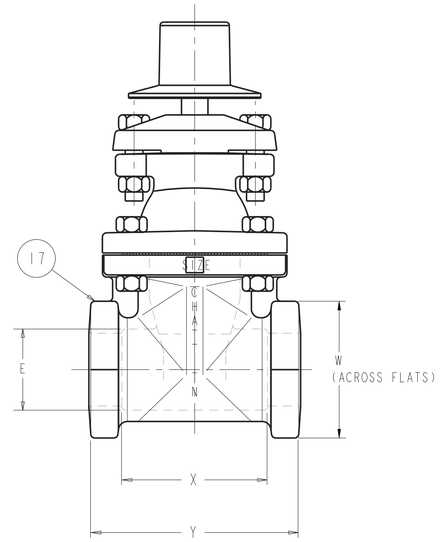

SCREW ENDS

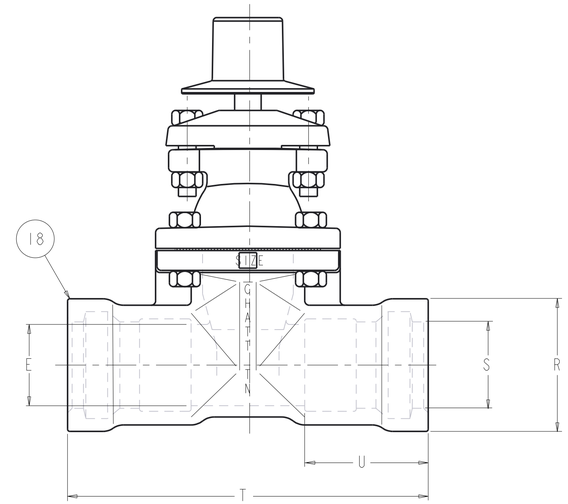

RADIAL ENDS

PART LIST					
ITEM	DESCRIPTION	REQ'D	MATEIAL	ASTM	
1	CAP SCREW	1	316 STAINLESS STEEL	F593	GROUP 2-CW
2	WRENCH NUT	1	DUCTILE IRON	A536	
3	STEM	1	BRONZE	B138	ALLOY C67600
4	STUFFING BOX	1	CAST IRON (SEE NOTE 2)	A126	CLASS B
5	STUFFING BOX BOLT STUFFING BOX NUT	2	316 STAINLESS STEEL 316 STAINLESS STEEL	F593 F594	GROUP 2-CW GROUP 2-CW
6	O-RING	3	RUBBER		NITRILE
7	O-RING	1	RUBBER		NITRILE
8	ANTI-FRICTION WASHER	2	ACETAL		
9	BONNET	1	DUCTILE IRON	A536	
10	BONNET BOLT BONNET NUT	"Z"	316 STAINLESS STEEL 316 STAINLESS STEEL	F593 F594	GROUP 2-CW GROUP 2-CW
11	BONNET GASKET	1	RUBBER	D2000	NEOPRENE
12	DISC NUT	1	BRONZE	B62	
13	DISC	1	SEE NOTE 1 & 2		
14	GUIDE CAP	2	ACETAL		
15	BODY - FLANGE ENDS	1	DUCTILE IRON	A536	
16	BODY - M.J. ENDS	1	DUCTILE IRON	A536	
17	BODY - SCREW ENDS	1	DUCTILE IRON	A536	
18	BODY - PVC ENDS	1	DUCTILE IRON	A536	

1. RUBBER ENCAPSULATED CAST IRON DISC
   CAST IRON - ASTM A126 CLASS B
   RUBBER - SBR - ASTM D2000

2. MANUFACTURER'S OPTION TO UPGRADE MAT'L
   TO DI - A536 GR 65-45-12 OR 70-50-05

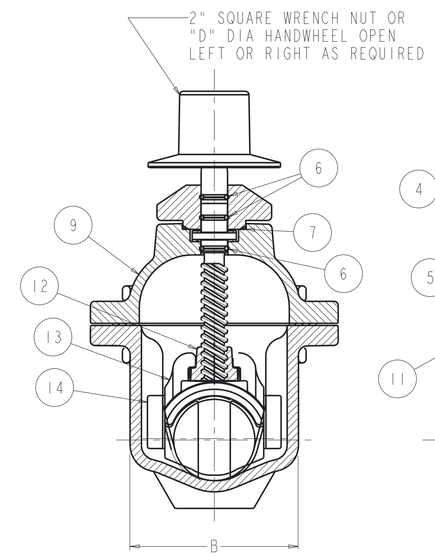

SCREW ENDS

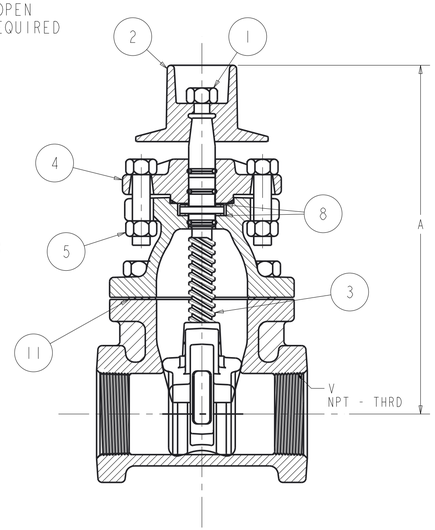

SCREW ENDS

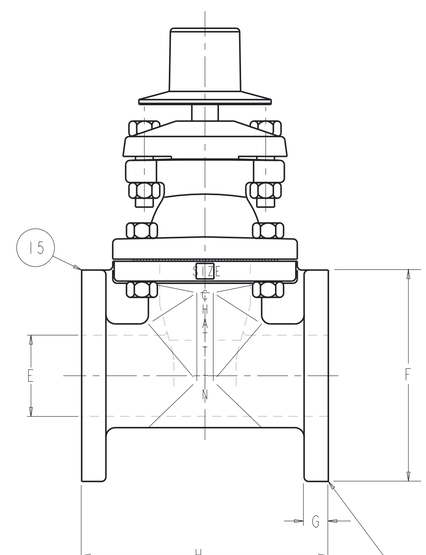

FLANGE ENDS

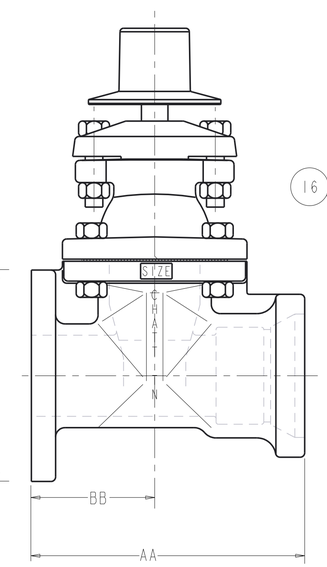

FLANGE x MECH. JOINT ENDS

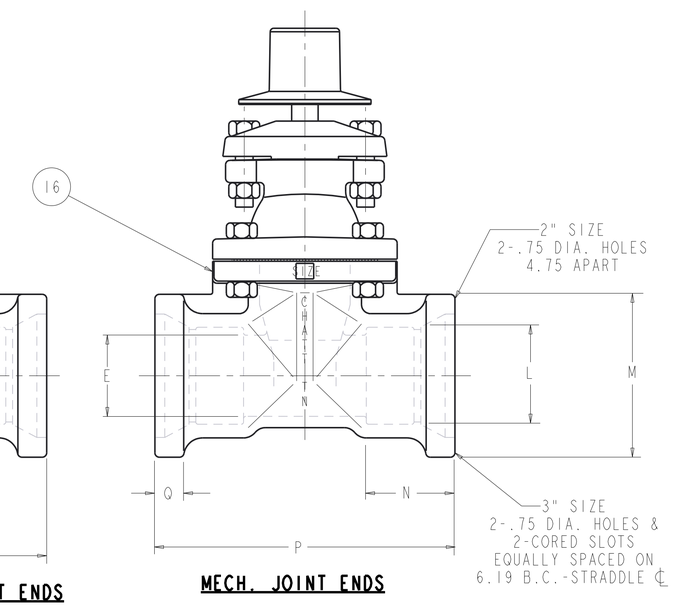

MECH. JOINT ENDS

J-NO. & SIZE HOLES
EQUALLY SPACED ON
K-B.C.- STRADDLE ℄

* MUELLER DOES NOT OFFER A 2.5" FL X MJ VALVE

DIMENSIONS - INCHES (ths drawing only)

VALVE SIZE	A	B	C	D	E	F	G	H	J	K	L	M	N	P	Q	R	S	T	U	V	W	X	Y	Z	AA	BB	CC Ⓐ	TURN TO OPEN
2	9.88	4.77	7.02	6.00	2.30	6.00	.69	7.00	4 - .75	4.75	2.61	4.62	2.50	8.50	.81	3.75	2.44	10.25	3.50	2 - 11.5	3.88	4.12	5.88	4	8.39	4.36	6.00	8
2.5	12.38	6.01	8.63	6.00	2.80	7.00	.75	7.50	4 - .75	5.50	N/A	N/A	N/A	N/A	N/A	4.44	2.93	12.24	3.69	2.5 - 8	4.38	4.12	6.76	6	N/A *	N/A *	8.00	11
3	12.38	6.01	8.63	6.00	3.30	7.50	.80	8.00	4 - .75	6.00	4.08	7.50	2.50	9.62	.94	5.16	3.56	11.75	4.12	3 - 8	5.12	5.12	6.88	6	8.80	4.55	8.00	11

7399

Ⓐ ECO 1781689
ECO 1803913
ADDED HAND
WHEEL
AO 4/25/17

APPROVED
By Matthew Sliger at 3:35 pm, Apr 25, 2017

DR BY	AO	3/28/17	UNLESS OTHERWISE NOTED BREAK CAST CORNER(S) BREAK MACH CORNER(S)	THIRD ANGLE PROJECTION	C.B. NO.
CHKR	BB	3/28/17			
ENGR	MS	3/28/17			
MGR			TOLERANCES UNLESS OTHERWISE NOTED LINEAR ± ANGULAR ±	PURCH. NO / FINISH ASSY	PATT. NO.
MFG				REF. NO. / SCALE NONE	
TOOL					
FDRY				STK. NO.	
MAT'L NOTED					

Mueller Co.

DESCR. 21N - 31N RWGV
A-2362-6,-8,-23, & -27
NRS - AWWA - 250W - 500 TEST

NUMBER 7399