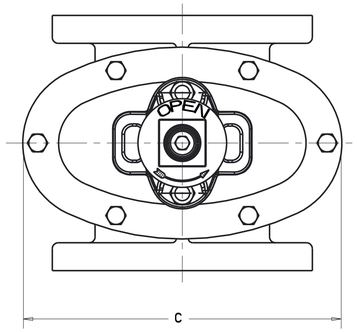

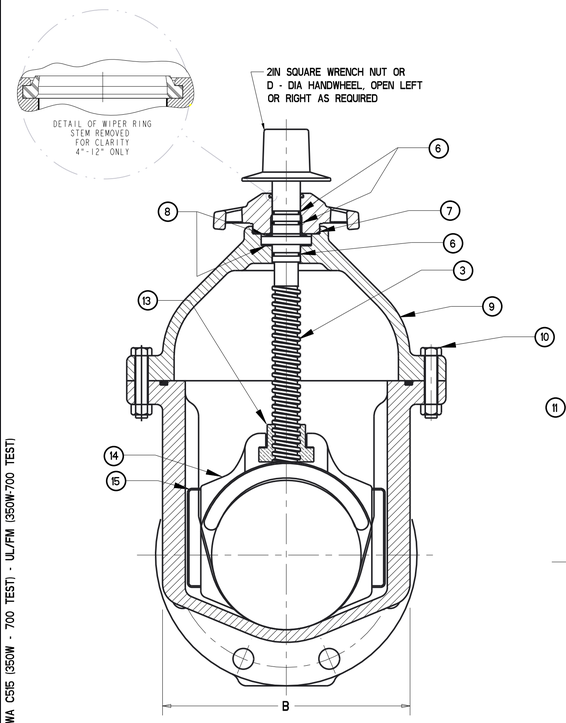

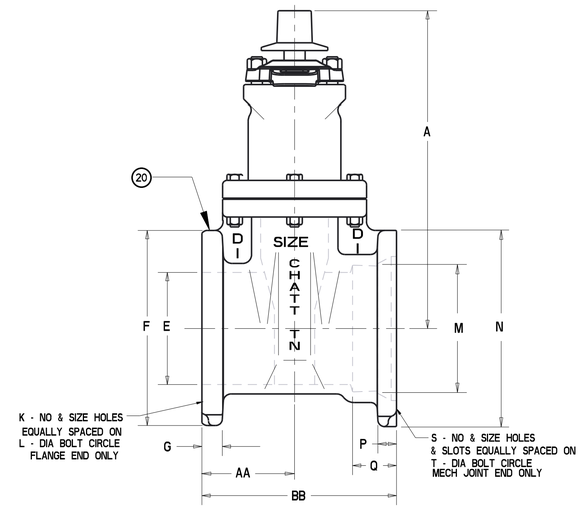

FLANGE X MECH JOINT ENDS

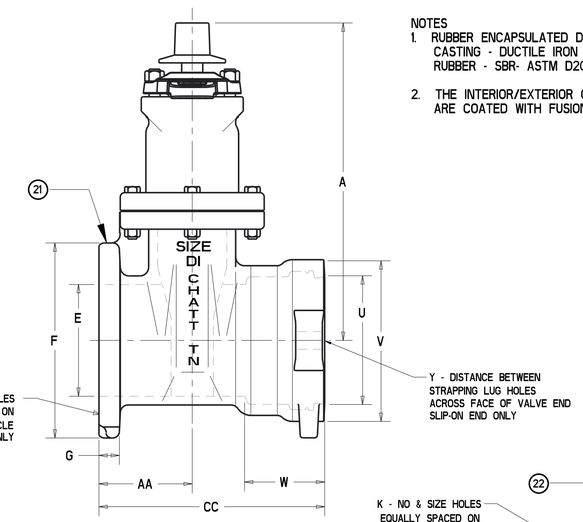

FLANGE X SLIP-ON ENDS

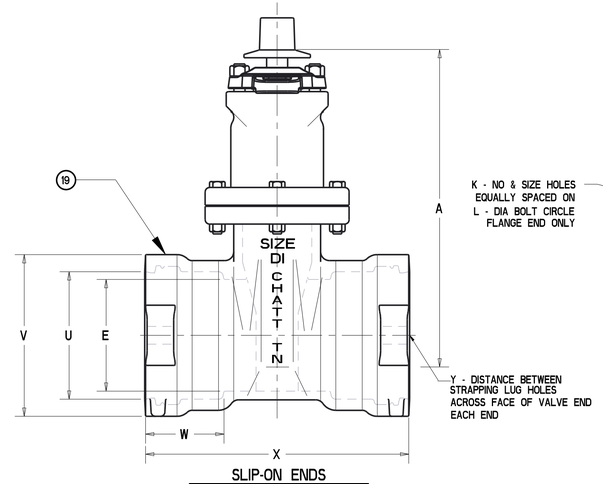

SLIP-ON ENDS

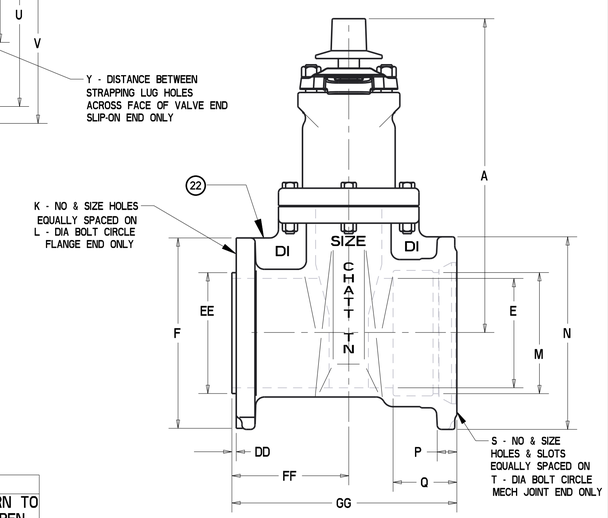

FLANGE X MECH JOINT ENDS

TAPPING VALVE

PART LIST					
ITEM	DESCRIPTION	REQ'D	MATERIAL	ASTM	NOTES
1	CAP SCREW	1	316 STAINLESS STEEL	F593	GROUP 2-CW
2	WRENCH NUT	1	DUCTILE IRON	A536	
3	STEM	1	BRONZE	B138	ALLOY C67600
4	STUFFING BOX	1	DUCTILE IRON	A536	
5	STUFFING BOX BOLTS STUFFING BOX NUTS	2	316 STAINLESS STEEL 316 STAINLESS STEEL	F593 F594	GROUP 2-CW GROUP 2-CW
6	O-RING	3	NITRILE	D2000	R34
7	O-RING	1	NITRILE	D2000	R34
8	ANTI-FRICTION WASHER	2	ACETAL		
9	BONNET	1	DUCTILE IRON	A536	
10	BONNET BOLTS BONNET NUTS	"Z"	316 STAINLESS STEEL 316 STAINLESS STEEL	F593 F594	GROUP 2-CW GROUP 2-CW
11	BONNET GASKET (O-RING)	1	NITRILE	D2000	R34
13	DISC NUT	1	BRONZE	B584	ALLOY C89833
14	DISC	1	SEE NOTE 1		
15	GUIDE CAP	2	ACETAL		
19	BODY - SLIP-ON ENDS	1	DUCTILE IRON	A536	
20	BODY - FLANGE x MJ END	1	DUCTILE IRON	A536	
21	BODY - FLANGE x SLIP-ON END	1	DUCTILE IRON	A536	
22	TAPPING BODY - FLANGE x MJ END	1	DUCTILE IRON	A536	
23	WIPER RING	1	THERMOPLASTIC POLYURETHANE	D412/D624	D2240/D792

NOTES
1. RUBBER ENCAPSULATED DISC
   CASTING - DUCTILE IRON ASTM A536
   RUBBER - SBR- ASTM D2000
2. THE INTERIOR/EXTERIOR OF THE BODY AND BONNET ARE COATED WITH FUSION BONDED EPOXY.

DIMENSIONS FOR RESILIENT WEDGE VALVE - INCHES / [MILLIMETERS] (this drawing only)

VALVE SIZE	A	B	C	E	F	G	K	L	M	N	P	Q	S	T	U	V	W	X	Y	Z	AA	BB	CC	DD	EE	FF	GG	TURN TO OPEN
4	14.19 [360.43]	8.25 [209.55]	10.79 [274.07]	4.30 [109.22]	9.00 [228.60]	.94 [23.88]	8-0.75 [8-19.05]	7.50 [190.50]	4.90 [124.46]	9.12 [231.65]	1.00 [25.40]	2.50 [63.50]	4-0.88 [4-22.35]	7.50 [190.50]	4.92 [124.97]	6.88 [174.75]	4.12 [104.65]	12.81 [325.37]	8.62 [218.95]	4	4.50 [114.30]	9.50 [241.30]	10.91 [277.11]	.18 [4.57]	4.97 [126.60]	6.05 [153.67]	11.73 [297.94]	14
6	18.00 [457.20]	10.50 [266.70]	13.50 [342.90]	6.30 [160.02]	11.00 [279.40]	1.06 [26.92]	8-0.88 [8-22.35]	9.50 [241.30]	7.00 [177.80]	11.12 [282.45]	1.09 [27.69]	2.50 [63.50]	6-0.88 [6-22.35]	9.50 [241.30]	7.02 [178.31]	9.12 [231.65]	4.38 [111.25]	14.96 [379.98]	10.62 [269.75]	6	5.25 [133.35]	11.06 [280.92]	12.73 [323.34]	.25 [6.35]	6.97 [177.42]	6.50 [165.10]	12.75 [323.85]	20.5
8	21.50 [546.10]	13.21 [335.53]	16.36 [415.54]	8.30 [210.82]	13.50 [342.90]	1.19 [30.23]	8-0.88 [8-22.35]	11.75 [298.45]	9.15 [232.41]	13.37 [339.60]	1.18 [29.97]	2.50 [63.50]	6-0.88 [6-22.35]	11.75 [298.45]	9.30 [236.22]	11.38 [289.05]	5.62 [142.75]	17.94 [455.68]	13.12 [333.25]	6	5.75 [146.05]	12.09 [307.09]	14.72 [373.89]	.25 [6.35]	8.97 [282.22]	7.50 [190.5]	14.37 [365.00]	26.5
10	25.50 [647.70]	16.48 [418.59]	19.99 [507.75]	10.30 [261.62]	16.00 [406.40]	1.25 [31.75]	12-1.00 [12-25.40]	14.25 [361.95]	11.20 [284.48]	15.62 [396.75]	1.25 [31.75]	2.50 [63.50]	8-0.88 [8-22.35]	14.00 [355.60]	11.38 [289.05]	13.50 [342.90]	5.62 [142.75]	18.50 [469.90]	16.38 [416.05]	8	6.50 [165.10]	13.94 [354.08]	15.75 [400.05]	.25 [6.35]	10.97 [279.02]	8.27 [210.06]	15.70 [398.78]	33
12	28.62 [726.95]	16.83 [427.48]	21.00 [533.40]	12.30 [312.42]	19.00 [482.60]	1.31 [33.27]	12-1.00 [12-25.40]	17.00 [431.80]	13.30 [337.82]	17.88 [454.15]	1.31 [33.27]	2.50 [63.50]	8-0.88 [8-22.35]	16.25 [412.75]	13.33 [338.58]	15.75 [400.05]	5.62 [142.75]	18.70 [474.98]	18.12 [460.25]	8	7.00 [177.80]	14.50 [368.30]	16.35 [415.29]	.25 [6.35]	12.97 [329.82]	7.13 [181.10]	15.00 [381.00]	38.5

DR BY	AO	12/13/17	UNLESS OTHERWISE NOTED
CHKR	BB	12/13/17	BREAK CAST CORNER(S)
ENGR	MS	12/13/17	BREAK MACH CORNER(S)
MGR			TOLERANCES
MFG			UNLESS OTHERWISE NOTED
TOOL			LINEAR ± ANGULAR ±
FDRY			
MAT'L	NOTED		

THIRD ANGLE PROJECTION
C.B. NO.
PURCH. NO
FINISH ASSY
PATT. NO.
REF. NO.
SCALE NONE
STK. NO.

Mueller Co.

DESCR. 4IN - 12IN 2361 w/ 316 SS FASTENERS
AWWA C515 - 350W - 700 TEST
UL/FM 350W - 700 TEST

NUMBER 7453

4IN - 12IN 2361 W/ 316 SS FASTENERS- AWWA C515 (350W - 700 TEST) - UL/FM (350W-700 TEST)

7453

ECO 959459

APPROVED
By Matthew Sliger at 12:33 pm, Dec 27, 2017

MUELLER CONFIDENTIAL: TITLE TO AND OWNERSHIP OF THIS ENGINEERING DATA REMAINS IN MUELLER COMPANY. NO USE IS TO BE MADE OF THIS DATA EXCEPT AS SPECIFICALLY AUTHORIZED BY MUELLER COMPANY. ASSENT ON THE PART OF THE RECIPIENTS TO THESE CONDITIONS IS PRESUMED.