| No. | DESCRIPTION | MATERIAL |
|---|---|---|
| 1 | STEM | LOW LEAD BRASS ALLOY |
| 2 | O-RING | EPDM D2000 |
| 3 | BALL | CAST LOW LEAD BRASS ALLOY |
| 4 | GASKET - SEAL | NITRILE D2000 |
| 5 | BODY | CAST LOW LEAD BRASS ALLOY |
| 6 | O-RING | EPDM D2000 |
| 7 | END PIECE | CAST LOW LEAD BRASS ALLOY |
| 8 | CAP | CAST BRASS ASTM B62 ALLOY C83600 |
| 9 | SOLID PIN | AISI 303 STAINLEES STEEL |

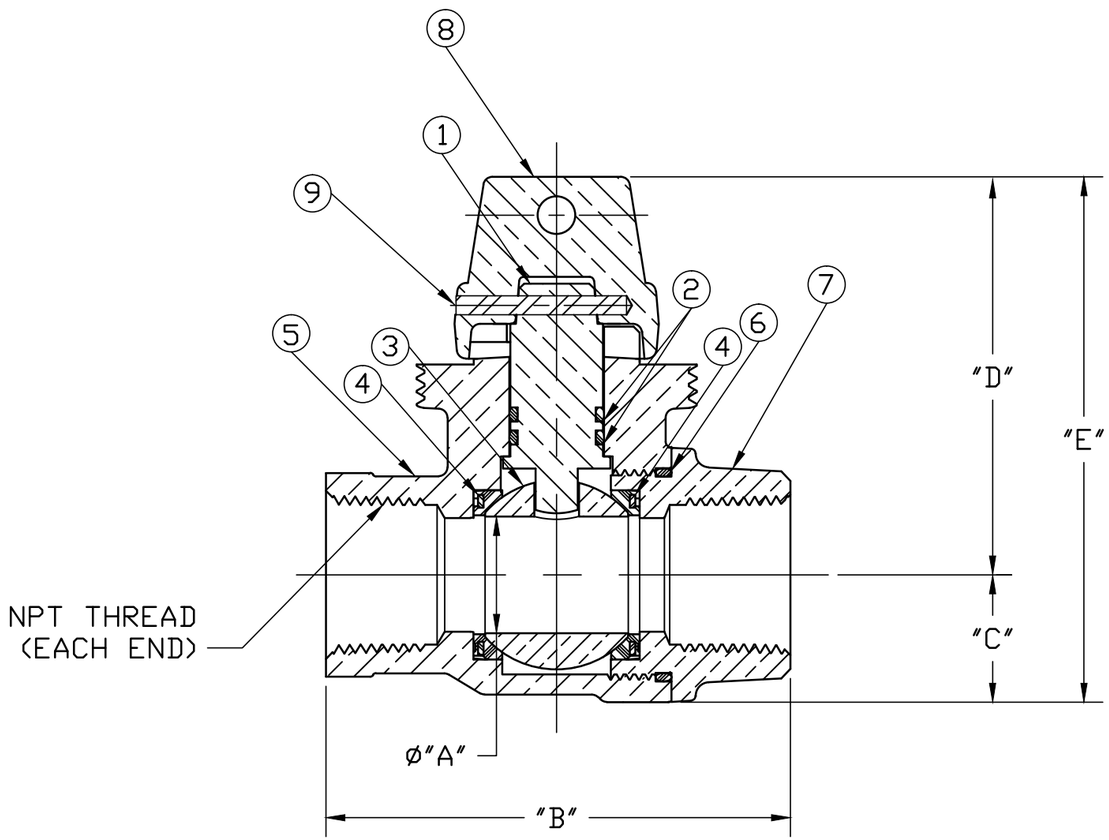


| SIZE | øA | B | C | D | E |
|---|---|---|---|---|---|
| 3/4 | .750 | 3.070 | .840 | 2.625 | 3.469 |
| 1 | 1.000 | 3.972 | 1.150 | 2.828 | 3.969 |
| 1-1/2 | 1.500 | 4.312 | 1.656 | 3.469 | 5.125 |
| 2 | 2.000 | 4.940 | 2.00 | 3.797 | 5.797 |

ALL WETTED PARTS ARE LOW LEAD BRASS ALLOY

FILEPATH: PROD-ENG\MUELLER\ASYSUBMITTALS\B20287N

| REV | ECR | DESCRIPTION | DATE | BY | CHKR |
|---|---|---|---|---|---|
| | | | | | |

PER EST NO: DXXXX EST FIN WT = 0.0000 lbs

| | | |
|---|---|---|
| DRFTR | RWB | 5/1/13 |
| CHKR | | |
| ENGR | | |
| MGR | | |
| | BY | DATE |
| STK No: | | |

Mueller Co.

UNLESS OTHERWISE NOTED
SURFACE PREPARATION:
BREAK CORNER(S) ---- .000
SURFACE FINISH -- 000 RMS
TOLERANCE(S):
LINEAR ---------- ± .000
ANGULAR --------- ± 0°00'

THIRD ANGLE PROJECTION

REF. No.

SCALE NONE

MAT'L:

DESCR.
MUELLER INLINE LLB CURB BALL VALVE
w/ MINN TOP; (FIP x FIP)

DWG NUMBER B20287N

TITLE TO AND OWNERSHIP OF THIS ENGINEERING DATA REMAINS IN Mueller Co. NO USE IS TO BE MADE OF THIS DATA EXCEPT AS SPECIFICALLY AUTHORIZED BY Mueller Co. ASSENT ON THE PART OF THE RECIPIENT TO THESE CONDITIONS IS PRESUMED

DWG NUMBER B20287N

44²-MRKTNG