No.	DESCRIPTION	MATERIAL DESCRIPTION
1	BODY	CAST LOW LEAD BRASS ALLOY
2	CAP	CAST BRASS ASTM B62 ALLOY C83600
3	STEM	LOW LEAD BRASS ALLOY
4	BALL	LOW LEAD BRASS ALLOY
5	GASKET	ASTM D2000 (NITRILE)
6	SOLID PIN	AISI 303 STAINLESS STEEL
7	O-RING	ASTM D2000 (EP)
8	END PIECE	CAST LOW LEAD BRASS ALLOY
9	O-RING	ASTM D2000 (EP)
10	TUBE NUT	CAST BRASS ASTM B62 ALLOY C83600

ALL WETTED PARTS ARE LOW LEAD BRASS ALLOY

SIZE	øA	B	C	D	E
3/4″	.75	3.66	.84	2.62	3.47
1″	1.00	4.76	1.15	2.82	3.97
1-1/2″	1.50	5.64	1.50	3.44	4.94
2″	2.00	6.82	1.82	3.77	5.59

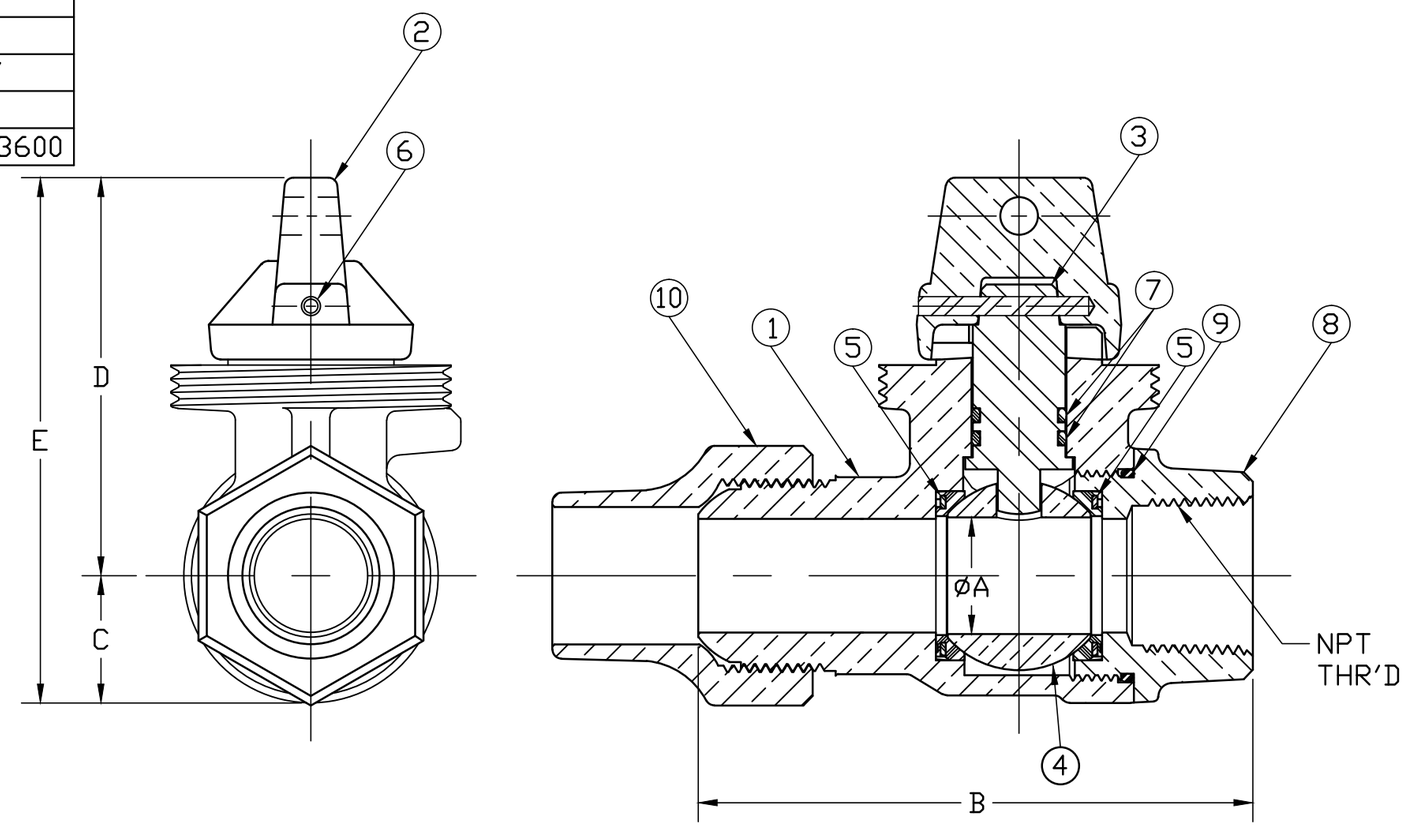

FILEPATH: PROD-ENG\MUELLER\ASYSUBMITTALS\B25124N

REV	ECR	DESCRIPTION	DATE	BY	CHKR

PER EST NO: DXXX EST FIN WT = 0.0000 lbs

DRFTR	RWB	4/3/15
CHKR		
ENGR		
MGR		
	BY	DATE
STK No:		
MAT'L:		
DESCR.	INLINE MINN TOP LLB BALL CURB VALVE (CS x FIP)	

Mueller Co.

UNLESS OTHERWISE NOTED
SURFACE PREPARATION:
BREAK CORNER(S) ---- .000
SURFACE FINISH --XXX RMS
TOLERANCE(S):
LINEAR ---------- ± .000
ANGULAR --------- ± 0°00′

THIRD ANGLE PROJECTION

REF. No.

SCALE FULL

DWG NUMBER B25124N

DWG NUMBER B25124N

44^2-MRKTG

TITLE TO AND OWNERSHIP OF THIS ENGINEERING DATA REMAINS IN Mueller Co. NO USE IS TO BE MADE OF THIS DATA EXCEPT AS SPECIFICALLY AUTHORIZED BY Mueller Co. ASSENT ON THE PART OF THE RECIPIENT TO THESE CONDITIONS IS PRESUMED