No.	DESCRIPTION	MATERIAL
1	BODY	CAST LOW LEAD BRASS ALLOY
2	KEY	CAST LOW LEAD BRASS ALLOY
3	KEY WASHER	CAST BRASS ASTM B62 ALLOY C83600
4	KEY NUT	CAST BRASS ASTM B62 ALLOY C83600

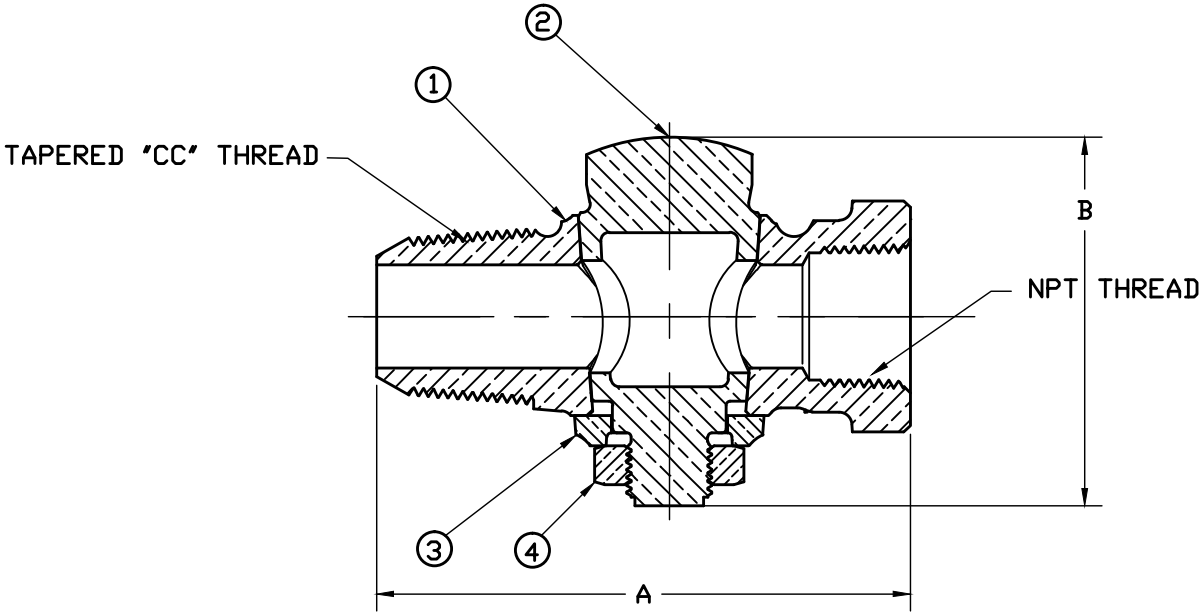

VALVE SIZE	A	B
1/2"	3.31	2.30
3/4"	3.88	2.68
1"	4.31	2.87
1-1/4"	5.39	3.80
1-1/2"	5.88	4.48
2"	7.00	4.83

NOTE: ALL WETTED PARTS ARE LOW LEAD BRASS ALLOY

FILEPATH: PROD-ENG\MUELLER\ASYSUBMITTALS\H10045N

REV	ECR	DESCRIPTION	DATE	BY	CHKR

PER EST NO: DXXXX EST FIN WT = 0.0000 lbs

DRFTR	jGarvin	2/3/11
CHKR		
ENGR		
MGR		
	BY	DATE
STK No:		
MAT'L:		
DESCR.	GROUND KEY CORPORATION STOP LLB ("CC" TAPER x FIP)	

Mueller Co.

UNLESS OTHERWISE NOTED
SURFACE PREPARATION:
BREAK CORNER(S) ---- .000
SURFACE FINISH -- XX RMS
TOLERANCE(S):
LINEAR ---------- ± .000
ANGULAR --------- ± 0°00'

THIRD ANGLE PROJECTION

REF. No. | SCALE

PART NUMBER H10045N

PART NUMBER H10045N

44^2-MRKTG