No.	QTY.	DESCRIPTION	MATERIAL
1	1	RUBBER GASKET	NITRILE D2000
2	1	COUP. NUT	CAST BRASS ASTM B62 ALLOY C83600
3	1	TAILPIECE	LOW LEAD BRASS ALLOY

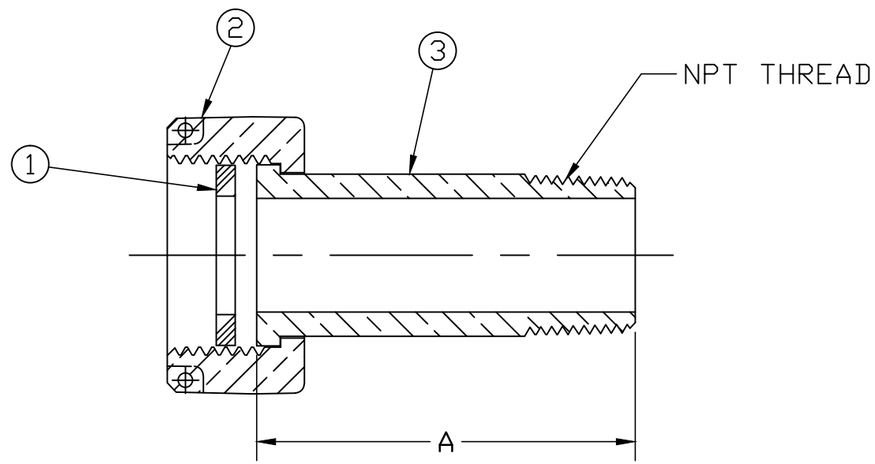

METER COUP. SIZE	A	MIP SIZE
5/8 x 1/2	2.375	1/2
5/8 x 3/4 x 3/4	2.500	3/4
1	2.625	1

NOTE: ALL WETTED PARTS ARE LOW LEAD BRASS ALLOY

FILEPATH: PROD-ENG\MUELLER\ASYSUBMITTALS\H10896N

REV	ECR	DESCRIPTION	DATE	BY	CHKR

PER EST NO: DXXXX EST FIN WT = 0.0000 lbs

DRFTR	RWB	2/11/13
CHKR		
ENGR		
MGR		
	BY	DATE
STK No:		
MAT'L:		
DESCR.	STRAIGHT METER COUPLING LOW LEAD BRASS (METER x MIP)	

Mueller Co.

UNLESS OTHERWISE NOTED
SURFACE PREPARATION:
BREAK CORNER(S) ---- .000
SURFACE FINISH -- 000 RMS
TOLERANCE(S):
LINEAR ---------- ± .000
ANGULAR --------- ± 0°00'

THIRD ANGLE PROJECTION

REF. No.

SCALE NONE

DWG NUMBER H10896N

DWG NUMBER H10896N

442-MRKTG

TITLE TO AND OWNERSHIP OF THIS ENGINEERING DATA REMAINS IN Mueller Co. NO USE IS TO BE MADE OF THIS DATA EXCEPT AS SPECIFICALLY AUTHORIZED BY Mueller Co. ASSENT ON THE PART OF THE RECIPIENT TO THESE CONDITIONS IS PRESUMED