No.	DESCRIPTION	REQ'D	MATERIAL
1	BODY	1	LOW LEAD BRASS ALLOY
2	STEM	1	LOW LEAD BRASS ALLOY
3	O-RING	2	RUBBER ASTM D-2000
4	BALL	1	LOW LEAD BRASS ALLOY
5	GASKET	1	RUBBER ASTM D-2000 NITRILE
6	O-RING	1	RUBBER ASTM D-2000
7	END PIECE	1	LOW LEAD BRASS ALLOY
8	COUPLING NUT	1	BRASS ASTM B-62 ALLOY C83600
9	O-RING	1	RUBBER ASTM D-2000
10	TAIL PIECE	1	LOW LEAD BRASS ALLOY

SIZE	ØA	B	C	D	E
1"	1.033/1.023	5.568	1.353	1.590	2.943
2"	2.015/2.005	8.407	2.165	2.558	4.723

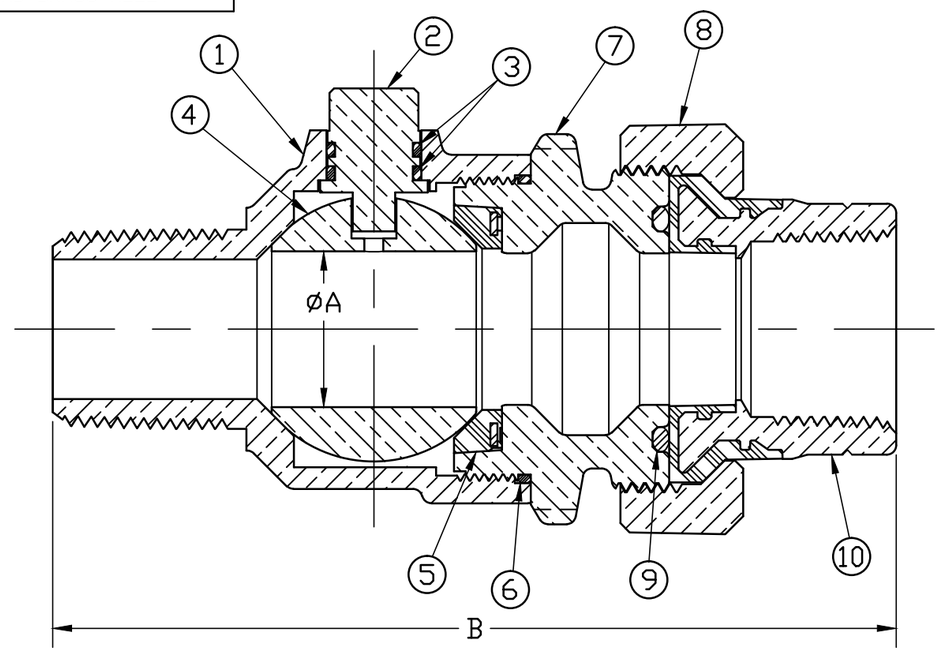

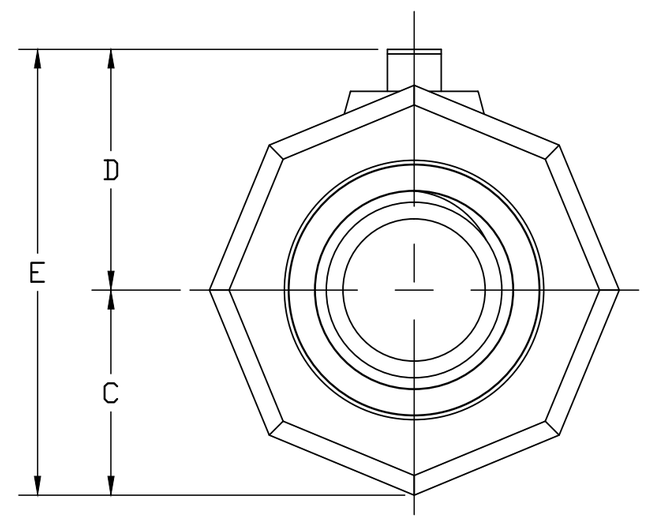

ALL WETTED PARTS ARE LOW LEAD BRASS ALLOY

FILEPATH: PROD-ENG\MUELLER\APPROVED\N30046N

REV	ECR	DESCRIPTION	DATE	BY	CHKR

PER EST NO: DXXXX EST FIN WT = 0.0000 lbs

DRFTR	RWB	4/17/13
CHKR		
ENGR		
MGR		
	BY	DATE
STK No:		
MAT'L:		

Mueller Co.

UNLESS OTHERWISE NOTED
SURFACE PREPARATION:
BREAK CORNER(S) ---- .000
SURFACE FINISH -- 000 RMS
TOLERANCE(S):
LINEAR ---------- ± .000
ANGULAR --------- ± 0°00'

THIRD ANGLE PROJECTION

REF. No.

SCALE NONE

DESCR. INSULATED LLB INLINE CORP BALL VALVE ASS'Y

DWG NUMBER N30046N

TITLE TO AND OWNERSHIP OF THIS ENGINEERING DATA REMAINS IN Mueller Co. NO USE IS TO BE MADE OF THIS DATA EXCEPT AS SPECIFICALLY AUTHORIZED BY Mueller Co. ASSENT ON THE PART OF THE RECIPIENT TO THESE CONDITIONS IS PRESUMED

WAS EXP NO:

DWG NUMBER N30046N

80-MKTING