No.	DESCRIPTION	MATERIAL DESCRIPTION
1	BRANCH CONN	CAST LOW LEAD BRASS ALLOY
2	PJ GASKET	ASTM D2000 NITRILE
3	PJ WASHER	POLYPROPYLENE
4	PJ CPLG NUT	CAST BRASS ASTM B62 ALLOY C83600

VALVE SIZE	A	B
3/4"x1"	1.91	1.03
1"x1-1/2"	2.38	1.40
1"x2"	2.38	1.59

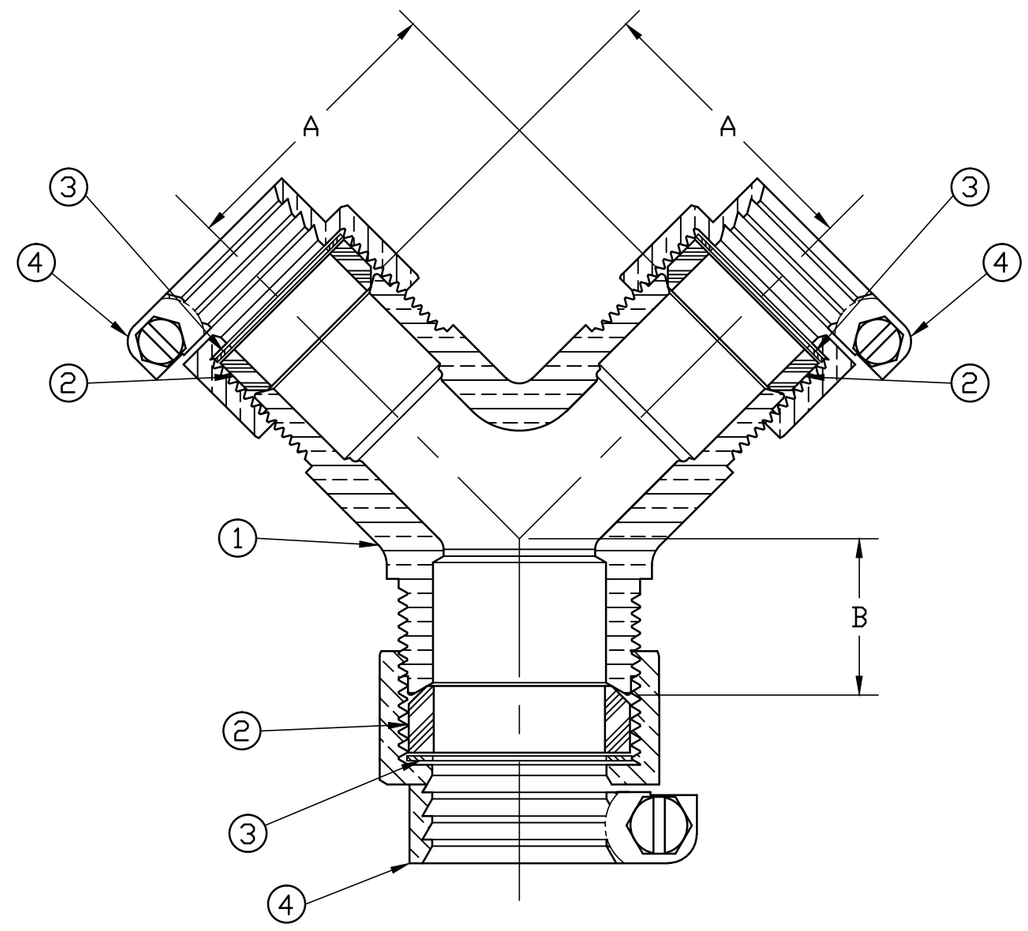

ALL WETTED PARTS ARE LOW LEAD BRASS ALLOY

FILEPATH: PROD-ENG\MUELLER\ASYSUBMITTALS\P15343N

REV	ECR	DESCRIPTION	DATE	BY	CHKR

PER EST NO: DXXXX EST FIN WT = 0.0000 lbs

DRFTR	RWB	6/20/14
CHKR		
ENGR		
MGR		
	BY	DATE

STK No:

MAT'L:

DESCR. LLB Y-BRANCH CONNECTION (PJ CTS ENDS)

Mueller Co.

UNLESS OTHERWISE NOTED
SURFACE PREPARATION:
BREAK CORNER(S) ---- .000
SURFACE FINISH -- XX RMS
TOLERANCE(S):
LINEAR ---------- ± .000
ANGULAR --------- ± 0°00'

THIRD ANGLE PROJECTION

REF. No. | SCALE

DWG NUMBER P15343N

DWG NUMBER P15343N

44^2-MRKTG

TITLE TO AND OWNERSHIP OF THIS ENGINEERING DATA REMAINS IN Mueller Co. NO USE IS TO BE MADE OF THIS DATA EXCEPT AS SPECIFICALLY AUTHORIZED BY Mueller Co. ASSENT ON THE PART OF THE RECIPIENT TO THESE CONDITIONS IS PRESUMED