No.	DESCRIPTION	MATERIAL
1	STEM	ASTM 584 ALLOY C89833 BRASS
2	O-RING	EPDM D2000
3	BALL	ASTM 584 ALLOY C89833 BRASS
4	GASKET - SEAL	EPDM D2000
5	BODY	ASTM 584 ALLOY C89833 BRASS
6	O-RING	EPDM D2000
7	END PIECE	ASTM 584 ALLOY C89833 BRASS
8	CAP	CAST BRASS ASTM B62 ALLOY C83600
9	SOLID PIN	AISI 303 STAINLEES STEEL

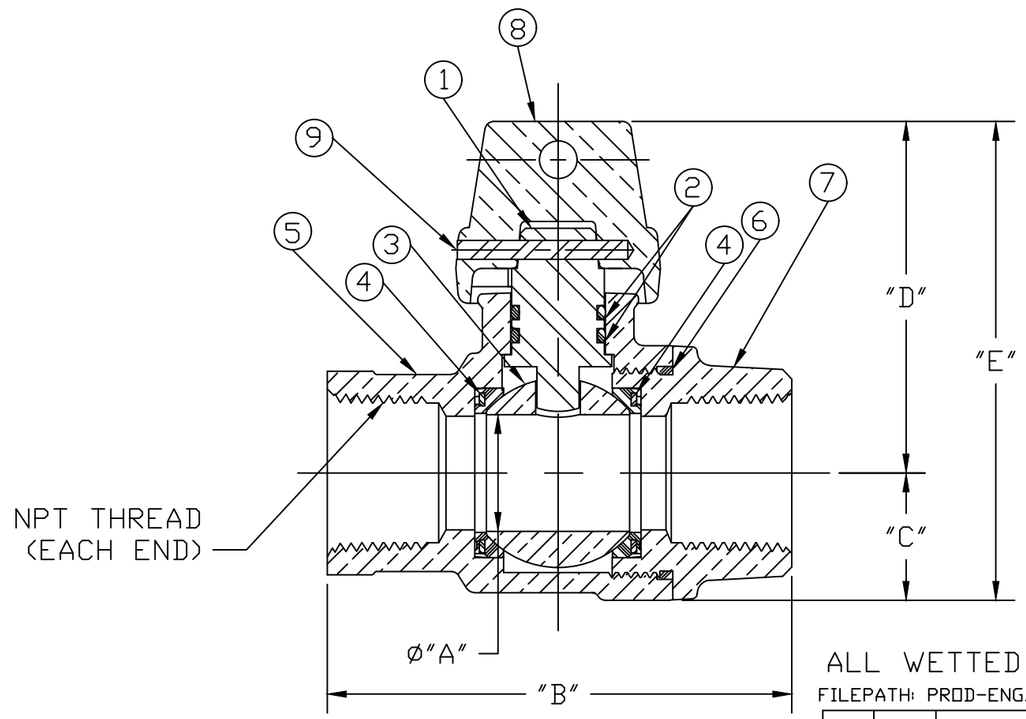

SIZE	øA	B	C	D	E
3/4R	.625	2.969	.750	2.120	2.870
3/4	.750	3.070	.840	2.323	3.163
1R	.750	3.522	.840	2.323	3.163
1	1.000	3.972	1.150	2.567	3.717
1x3/4	.750	3.287	.840	2.627	3.467
1-1/2	1.500	4.134	1.500	3.372	4.872
2	2.000	4.940	1.820	3.919	5.739

ALL WETTED PARTS ARE NO LEAD BRASS ALLOY

FILEPATH: PROD-ENG/MUELLER/ASYSUBMITTALS/B20283N

REV	ECR	DESCRIPTION	DATE	BY	CHKR

PER EST NO: DXXXX EST FIN WT = 0.0000 lbs

DRFTR	jGarvin	12/21/09
CHKR		
ENGR		
MGR		
	BY	DATE
STK No:		
MAT'L:		
DESCR.	INLINE NLB CURB BALL VALVE (FIP x FIP)	

MUELLER

UNLESS OTHERWISE NOTED
SURFACE PREPARATION:
BREAK CORNER(S) ---- .000
SURFACE FINISH -- XX RMS
TOLERANCE(S):
LINEAR ---------- ± .000
ANGULAR --------- ± 0°00'

THIRD ANGLE PROJECTION

REF. No.

SCALE NONE

DWG NUMBER B20283N

DWG NUMBER B20283N

44^2-MRKTG

TITLE TO AND OWNERSHIP OF THIS ENGINEERING DATA REMAINS IN Mueller Co. NO USE IS TO BE MADE OF THIS DATA EXCEPT AS SPECIFICALLY AUTHORIZED BY Mueller Co. ASSENT ON THE PART OF THE RECIPIENT TO THESE CONDITIONS IS PRESUMED