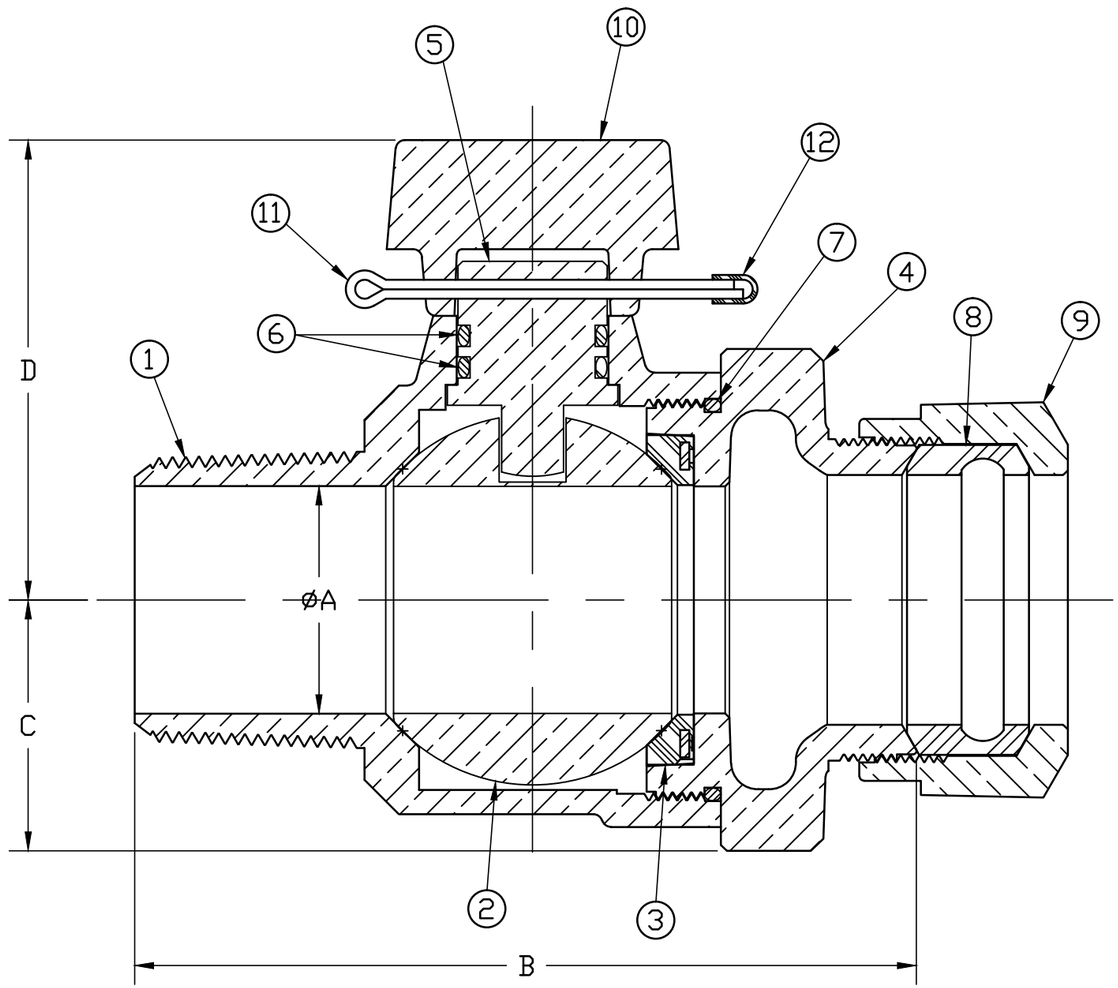

No.	DESCRIPTION	MATERIAL
1	BODY	CAST LOW LEAD BRASS ALLOY
2	BALL	LOW LEAD BRASS ALLOY
3	GASKET - SEAL	NITRILE D2000
4	END PIECE	CAST LOW LEAD BRASS ALLOY
5	STEM	LOW LEAD BRASS ALLOY
6	O-RING	EPDM D2000
7	O-RING	EPDM D2000
8	GASKET	BUNA-A
9	NUT	CAST BRASS ASTM B62 ALLOY C83600
10	T-HEAD CAP	CAST BRASS ASTM B62 ALLOY C83600
11	COTTER PIN	STAINLESS STEEL
12	SILICON CAP	SILICON RUBBER

SIZE	øA	B	C	D
1″	1.500	4.648	1.150	2.302
1-1/2″	1.500	5.159	1.656	3.035
2″	2.000	5.612	2.002	3.473

ALL WETTED PARTS ARE LOW LEAD BRASS ALLOY

FILEPATH: PROD-ENG\MUELLER\ASYSUBMITTALS\B2502800N

REV	ECR	DESCRIPTION	DATE	BY	CHKR

PER EST NO: DXXXX EST FIN WT = 0.0000 lbs

DRFTR	RWB	3/21/18
CHKR		
ENGR		
MGR		
	BY	DATE
STK No:		
MAT'L:		

Mueller Co.

UNLESS OTHERWISE NOTED
SURFACE PREPARATION:
BREAK CORNER(S) ---- .000
SURFACE FINISH -- XX RMS
TOLERANCE(S):
LINEAR ---------- ± .000
ANGULAR --------- ± 0°00′

THIRD ANGLE PROJECTION

REF. No.

SCALE NONE

DESCR. INLINE LLB BALL CORP VALVE W/ DETACHABLE T-HEAD CAP (IP x CTS 110)

DWG NUMBER B2502800N

TITLE TO AND OWNERSHIP OF THIS ENGINEERING DATA REMAINS IN Mueller Co. NO USE IS TO BE MADE OF THIS DATA EXCEPT AS SPECIFICALLY AUTHORIZED BY Mueller Co. ASSENT ON THE PART OF THE RECIPIENT TO THESE CONDITIONS IS PRESUMED

DWG NUMBER B2502800N

44^2-MRKTG