No.	DESCRIPTION	MATERIAL
1	CAP	CAST BRASS ASTM B62 ALLOY C83600
2	SOLID PIN	AISI 303 STAINLESS STEEL
3	STEM	LOW LEAD BRASS ALLOY
4	O-RING	EPDM ASTM D2000
5	BALL	LOW LEAD BRASS ALLOY
6	GASKET - SEAL	NITRILE ASTM D2000
7	BODY	CAST LOW LEAD BRASS ALLOY
8	O-RING	EPDM ASTM D2000
9	END PIECE	CAST LOW LEAD BRASS ALLOY
10	CTS GSKT SUB	SBR ASTM D2000 - GSKT410ss - BAND
11	CONNX NUT	CAST BRASS ASTM B62 ALLOY C83600

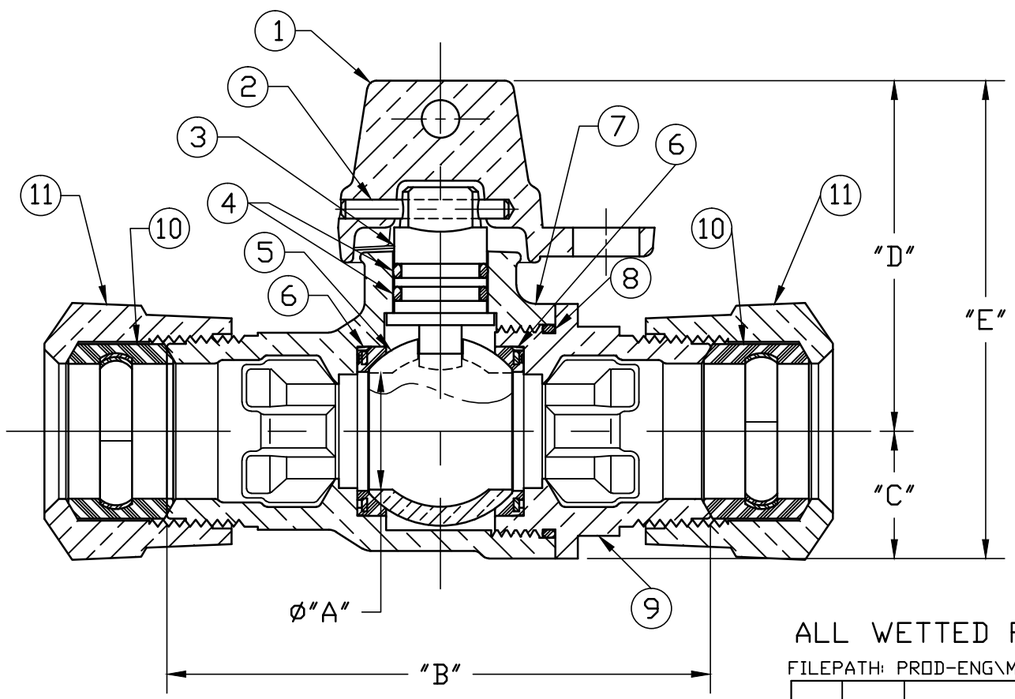

SIZE	øA	B	C	D	E
3/4"R	.62	3.44	.75	2.11	2.86
3/4"	.75	4.00	.84	2.31	3.15
1"R	.75	3.59	.84	2.31	3.15
1"	1.00	5.06	1.15	2.62	3.77
1-1/2"	1.50	5.06	1.50	3.35	4.85
2"	2.00	5.50	1.82	3.90	5.72

ALL WETTED PARTS ARE LOW LEAD BRASS ALLOY

FILEPATH: PROD-ENG\MUELLER\ASYSUBMITTALS\B25146N

REV	ECR	DESCRIPTION	DATE	BY	CHKR

PER EST NO: DXXXX EST FIN WT = 0.0000 lbs

DRFTR	RWB	2/24/14
CHKR		
ENGR		
MGR		
	BY	DATE
STK No:		
MAT'L:		
DESCR.	INLINE LLB BALL METER VALVE (110 CTS x 110 CTS)	

Mueller Co.

UNLESS OTHERWISE NOTED
SURFACE PREPARATION:
BREAK CORNER(S) ---- .000
SURFACE FINISH -- XX RMS
TOLERANCE(S):
LINEAR ---------- ± .000
ANGULAR --------- ± 0°00'

THIRD ANGLE PROJECTION

REF. No.

SCALE NONE

DWG NUMBER B25146N

DWG NUMBER B25146N

442-MRKTNG

TITLE TO AND OWNERSHIP OF THIS ENGINEERING DATA REMAINS IN Mueller Co. NO USE IS TO BE MADE OF THIS DATA EXCEPT AS SPECIFICALLY AUTHORIZED BY Mueller Co. ASSENT ON THE PART OF THE RECIPIENT TO THESE CONDITIONS IS PRESUMED