No.	DESCRIPTION	MATERIAL
1	BODY	CAST LOW LEAD BRASS ALLOY
2	CONN. NUT	CAST BRASS ASTM B62 ALLOY C83600
3	GASKET SUB.	SBR. D2000 - GSKT. 410ss - BAND

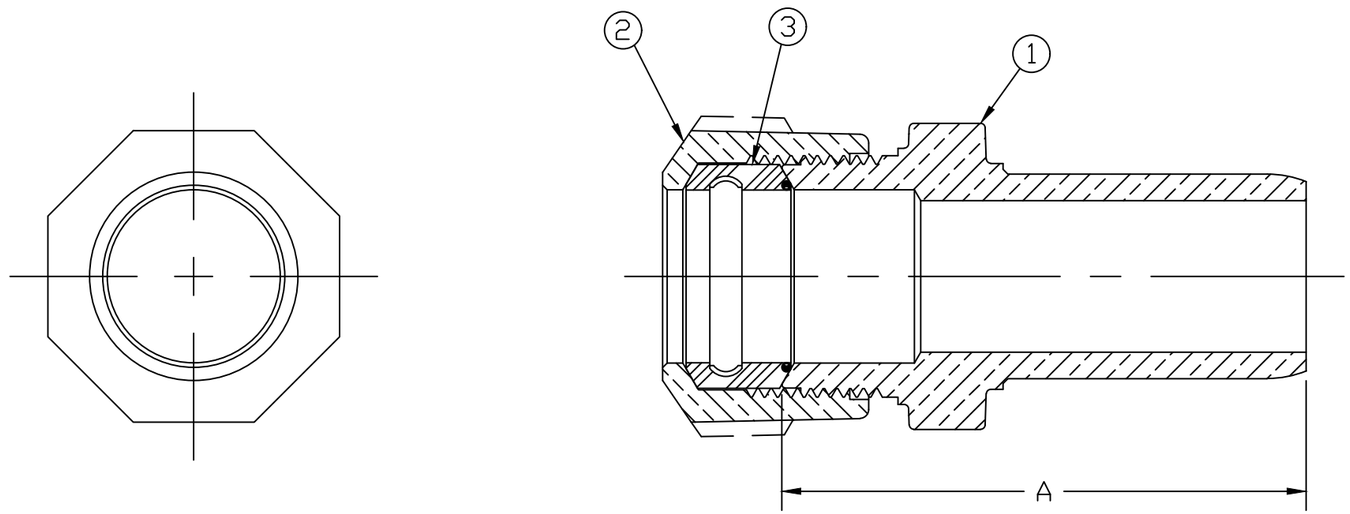

SIZE	A
3/4″	3.05
1″	3.46

ALL WETTED PARTS ARE LOW LEAD BRASS ALLOY

FILEPATH: PROD-ENG\JJ\SUBMITTALS\E2639SG

REV	ECR	DESCRIPTION	DATE	BY	CHKR

DRFTR	RWB	2/5/10
CHKR		
ENGR		
MGR		
	BY	DATE
STK No:		
MAT'L:		
DESCR.	CONVERSION COUPLING LLB PJ CTS x IPS TUBE	

JONES

UNLESS OTHERWISE NOTED
SURFACE PREPARATION:
BREAK CORNER(S) ---- .000
SURFACE FINISH -- XX RMS
TOLERANCE(S):
LINEAR ---------- ± .000
ANGULAR --------- ± 0°00′

THIRD ANGLE PROJECTION

REF. No.

SCALE

DWG NUMBER
E2639SG

TITLE TO AND OWNERSHIP OF THIS ENGINEERING DATA REMAINS IN Mueller Co. NO USE IS TO BE MADE OF THIS DATA EXCEPT AS SPECIFICALLY AUTHORIZED BY Mueller Co. ASSENT ON THE PART OF THE RECIPIENT TO THESE CONDITIONS IS PRESUMED

DWG NUMBER
E2639SG

JJ-MRKTG