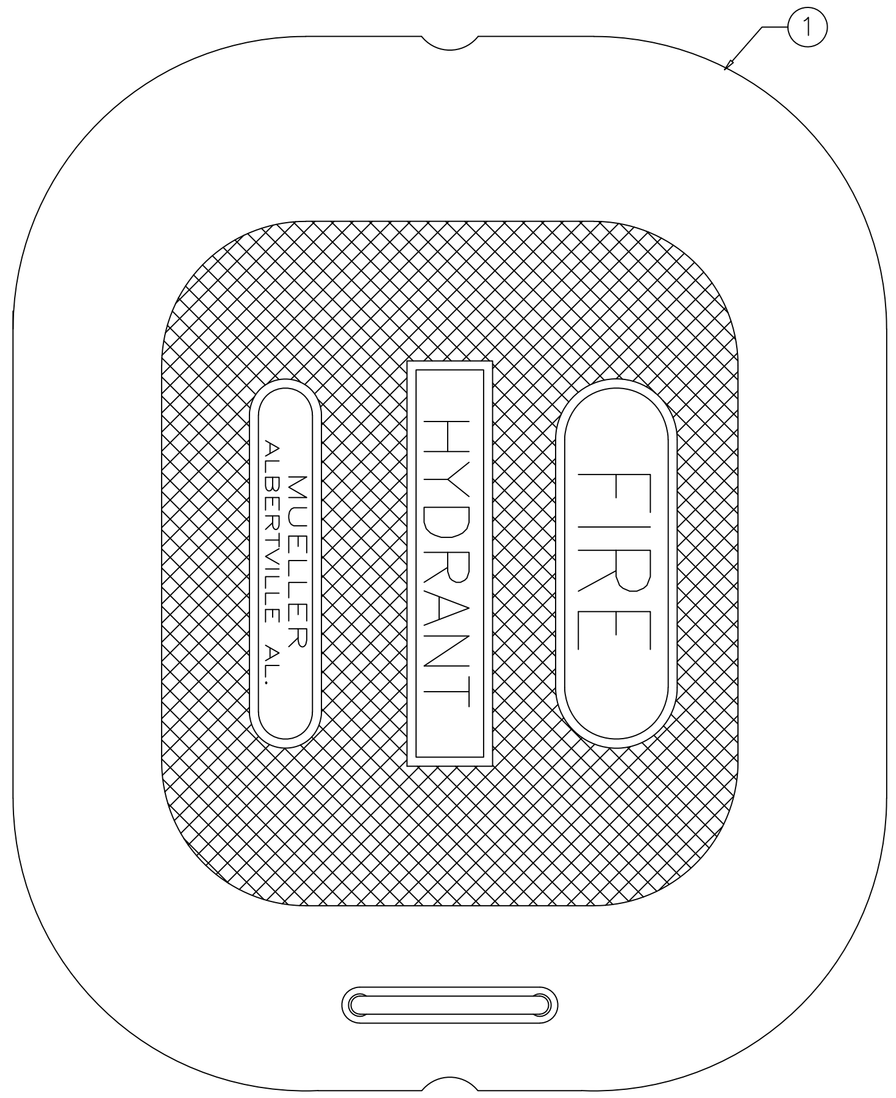

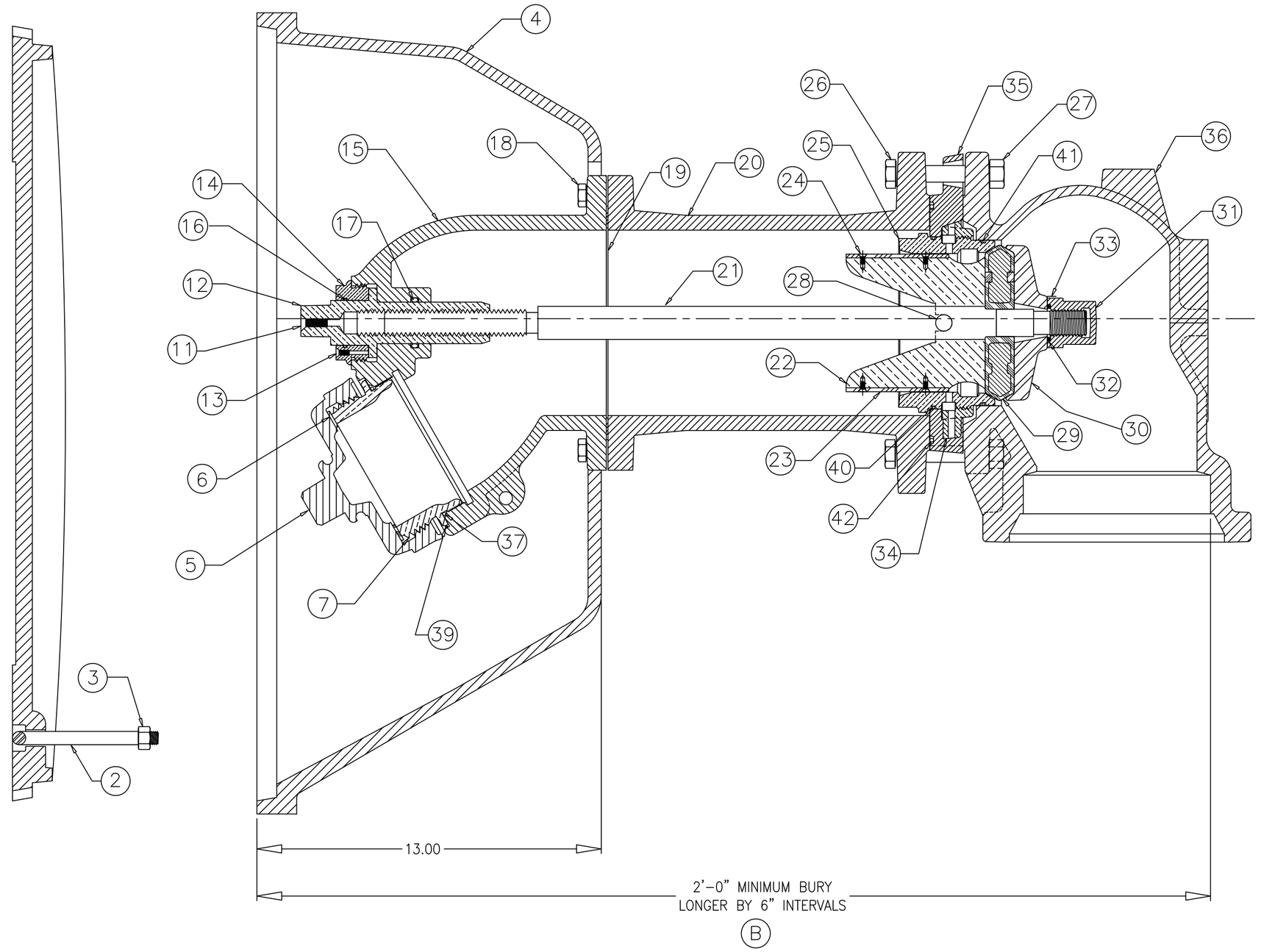

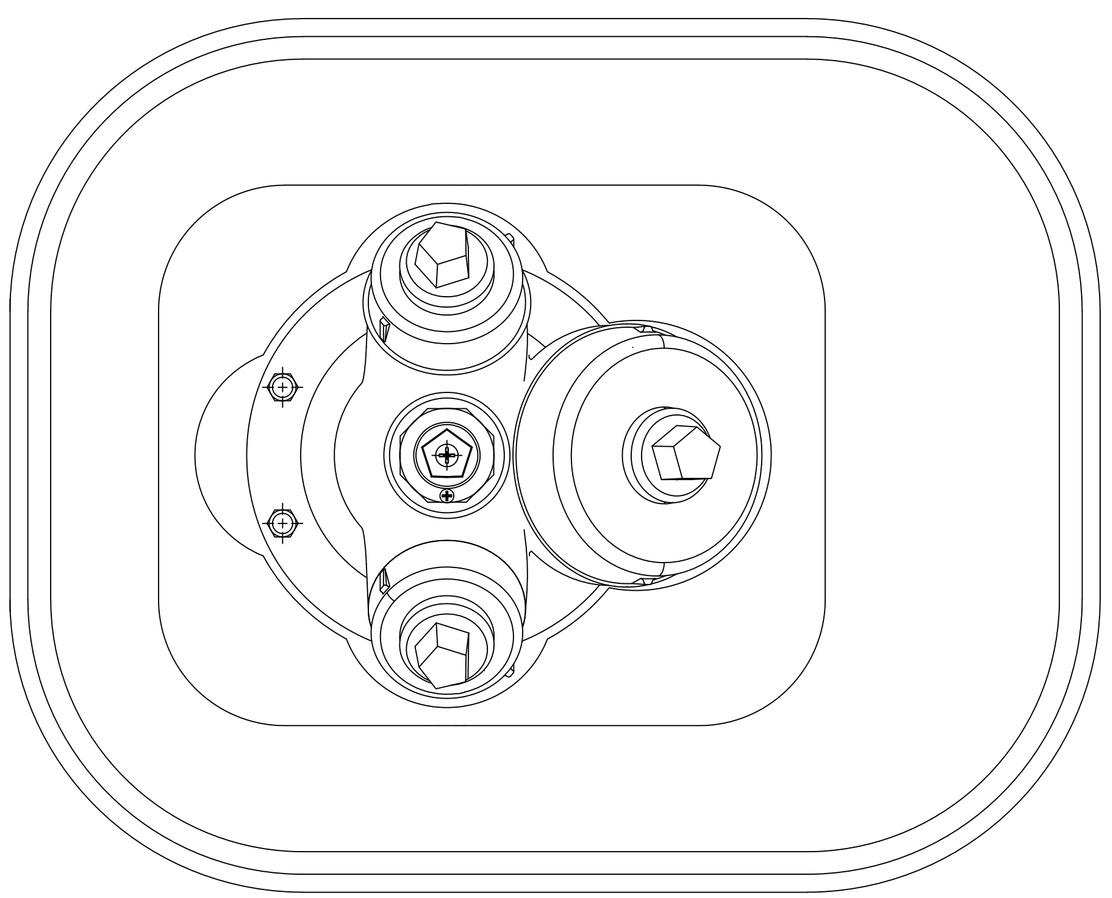

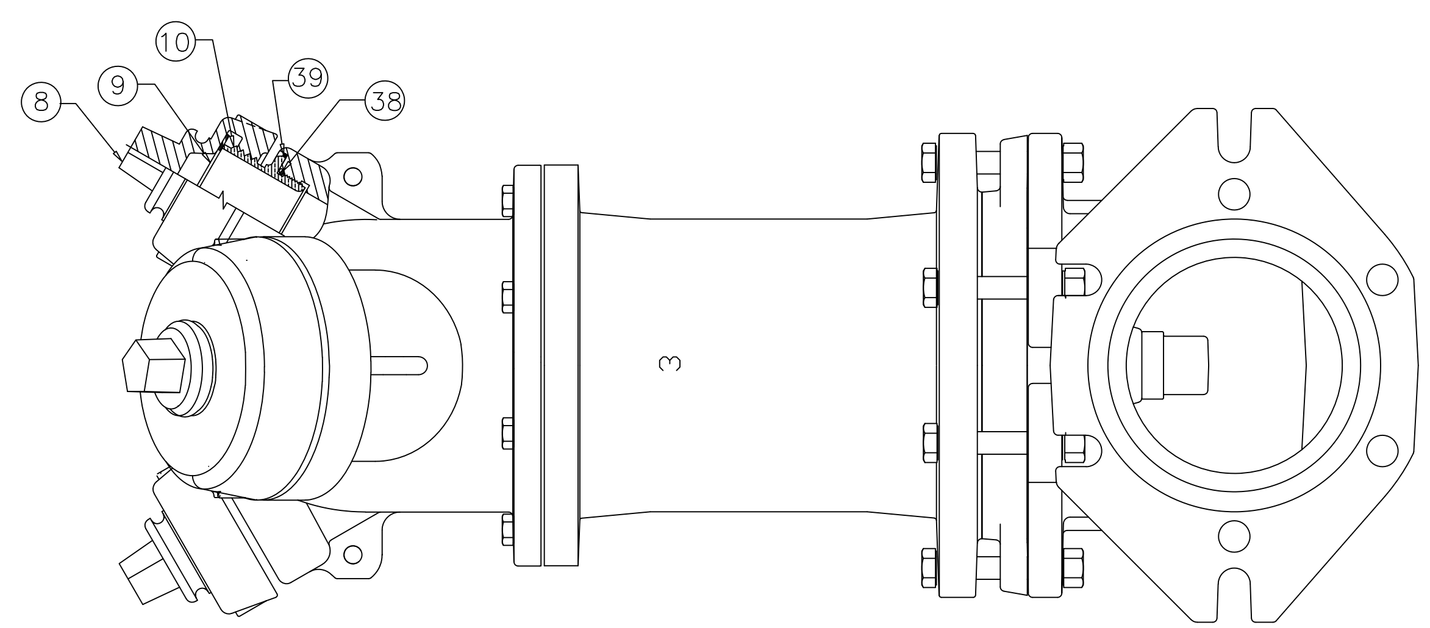

	ITEM	DESCRIPTION	NO. REQ'D	MATERIAL	ASTM	CURRENT MATERIAL (D) DESCRIPTION	ALTERNATE STANDARD (D)
	1	COVER	1	CAST IRON	A-126	CLASS B	
	2	LIFT HANDLE	1	STEEL	A-575	GRADE M1020	
D	3	NUT	2	STEEL	J995	CR. 8 GALVANIZED	
	4	FLUSH BOX	1	CAST IRON	A-126	CLASS B	
	5	PUMPER CAP	1	CAST IRON	A-126	CLASS B	
D	6	PUMPER GASKET	1	RUBBER	D2000	NEOPRENE	
	7	PUMPER NOZZLE	1	BRONZE	B584	ALLOY C89833	B584 C87850 OR C87600
	8	HOSE CAP	2	CAST IRON	A-126	CLASS B	
D	9	HOSE GASKET	2	RUBBER	D2000	NEOPRENE	
	10	HOSE NOZZLE	2	BRONZE	B584	ALLOY C89833	B584 C87850 OR C87600
	11	OIL SCREW	1	BRASS	B-36	ALLOY 8	
	12	OPERATING NUT	1	BRONZE	B584	ALLOY C89833	B584 C87850 OR C87600
	13	OIL SCREW	1	BRASS	B-36	ALLOY 8	
D	14	HOLD DOWN NUT	1	BRONZE	B-62	ALLOY C83600	B584 C87850 OR C87600
	15	UPPER BARREL	1	CASTIRON	A-126	CLASS B	
	16	O' RING SEAL	1	RUBBER	D2000	2 BG 715	
	17	O' RING SEAL	1	RUBBER	D2000	2 BG 715	
	18	CAP SCREW	8	STEEL		ASA B18.6.2 PLATED	
	19	BARREL GASKET	2	RUBBER		CLOTH INSERTED	
D	20	LOWER BARREL	1	DUCTILE IRON	A-536	GR. 65-45-12	GR. 70-50-05
D	21	STEM	1	CARBON STEEL	A-576	GR. 1144T	
	22	UPPER VALVE PLATE	1	BRONZE	B584	ALLOY C89833	B584 C87850 OR C87600
	23	DRAIN VALVE FACING	2	H.D. POLYETHYLENE		L.S 5660-00	
D	24	DRAIN VALVE SCREW	4	STAINLESS STEEL	A-276	300 SERIES	
D	25	SEAT RING	1	BRASS	B584	ALLOY C89833	B584 C87850 OR C87600
D	26	SHOE BOLT	6	STEEL	SAE J429	GR. 5 GALVANIZED	
D	27	SHOE NUTS	6	STEEL	J995	GR. 5 GALVANIZED	
D	28	STEM PIN	1	STAINLESS STEEL	A276	300 SERIES	
D	29	MAIN VALVE	1	RUBBER	D2000	NATURAL	
	30	LOWER VALVE PLATE	1	CAST IRON	A-126	CLASS B	
	31	VALVE NUT	1	CAST IRON	A-126	CLASS B	
D	32	VALVE NUT SEAL	1	RUBBER		NATURAL	
D	33	LOCK WASHER	1	STAINLESS STEEL	A-126	304	
D	34	DRAIN RING	1	BRONZE	B-62	ALLOY C83600	B584 C87850 OR C87600
	35	DRAIN RING HOUSING	1	CAST IRON	A-126	CLASS B	
D	36	SHOE 6' MJ	1	DUCTILE IRON	A-536	GR. 65-45-12	GR. 70-50-05
D	37	PUMPER NOZZLE 'O'RING	1	RUBBER	D2000	BUNA N	
D	38	HOSE NOZZLE 'O'RING	2	RUBBER	D2000	BUNA N	
	39	NOZZLE LOCK	3	STAINLESS STEEL	A-126	305 OR 410	
D	40	TOP SEAL 'O'RING	1	RUBBER	D2000	BUNA N	
D	41	BOTTOM SEAL 'O'RING	1	RUBBER	D2000	BUNA N	
D	42	O' RING SEAL	1	RUBBER	D2000	BUNA N	

FH-92

REV.	DESCRIPTION	REF.	DRFT'R	CHK'R	APP	DATE
D	REVISED PARTS LIST TO INCLUDE ALTERNATE STANDARD AND ADD CURRENT MATERIAL DESCRIPTION, UPDATE MAIN VALVE & UPPER VALVE PLATE, REVISE ITEM'S #14, 21, 26, & 34	EO5200	MRG			2-8-23
C	REVISED ITEMS 7, 10, 12, 22, 25, & 31		JMG			11-7-13
B	CHANGE 3'-0" BURY DIMENSION TO STANDARD BURY NOTE.		ANC			5-27-10
A	REMOVE CHAINS, CHAINS ARE OPTIONAL					

A/C (MILLIMETER) INCH

INITIAL RELEASE

DRFT'R	JEH	5-5-98
CHK'R		
APP	JMG	5-5-98
E.O. NUMBER	EO-1547	

TOLERANCES – MACHINING
UNLESS OTHERWISE NOTED
BREAK EDGES MACH. .006/.016
FINISH SURFACES 125
FRACTIONS ±1/64
DECIMALS 2 PL ±.025 3 PL ±
ANGLES ±1°

THIRD ANGLE PROJECTION
PURCH. FINISH
REF. NO. SCALE NONE
STK. NO.

MUELLER

MAT'L.
DESCR. 5-1/4 FLUSH HYD. 2006 STYLE WITH CENT. SHOE
REVISION D
NUMBER FH-92
SHEET 1 of 1