SIZE	A	B	C	D
3/4	3.49	1.92	3.17	.44
1	4.75	2.44	4.00	.44
1-1/2	6.31	3.42	5.52	.53
2	6.03	3.70	6.05	.56

No.	QTY.	DESCRIPTION	MATERIAL
1	1	BODY	CAST NO LEAD BRASS ALLOY
2	1	KEY	CAST NO LEAD BRASS ALLOY
3	1	TOP SEAL	RUBBER, MUELLER RUBBER CODE R8
4	1	RETAINING RING	BRONZE ASTM B103 ALLOY C52100
5	1	THRUST WASHER	CELCON GRADE M90 CF2001
6	1	TOP O-RING	RUBBER, ASTM D-2000 (EPDM
7	1	PORT O-RING	RUBBER, ASTM D-2000 (EPDM
8	2	CTS GSKT SUB	SBR D2000 - GSKT 410ss - BAND
9	2	THAW NUT W/ SCREW	CAST BRASS ASTM B62 ALLOY C83600

LUBE PER MUELLER ESP E-95

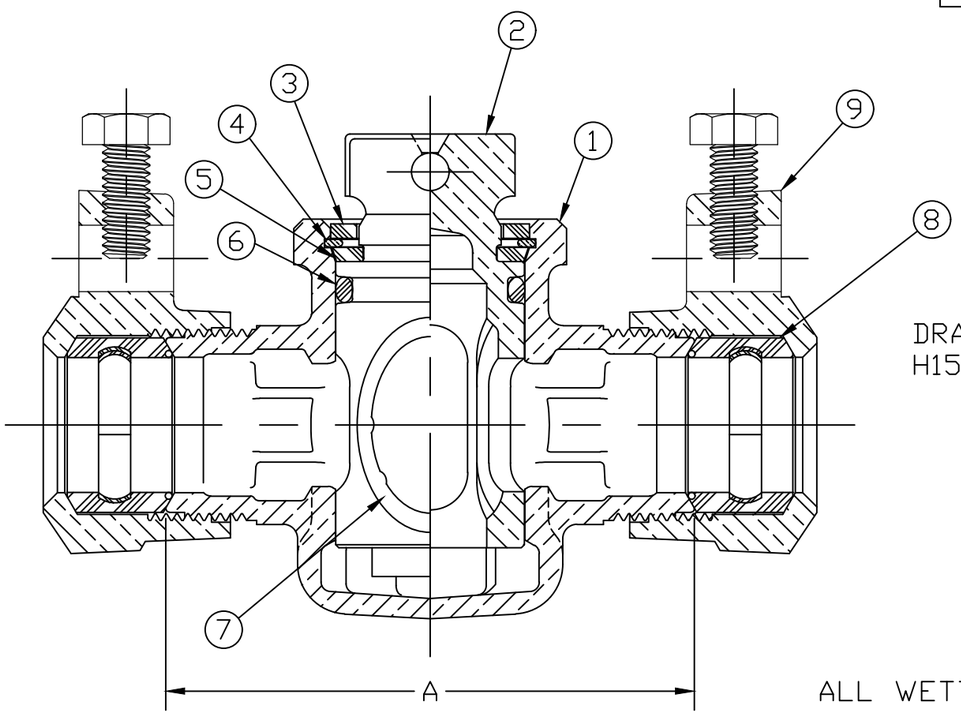

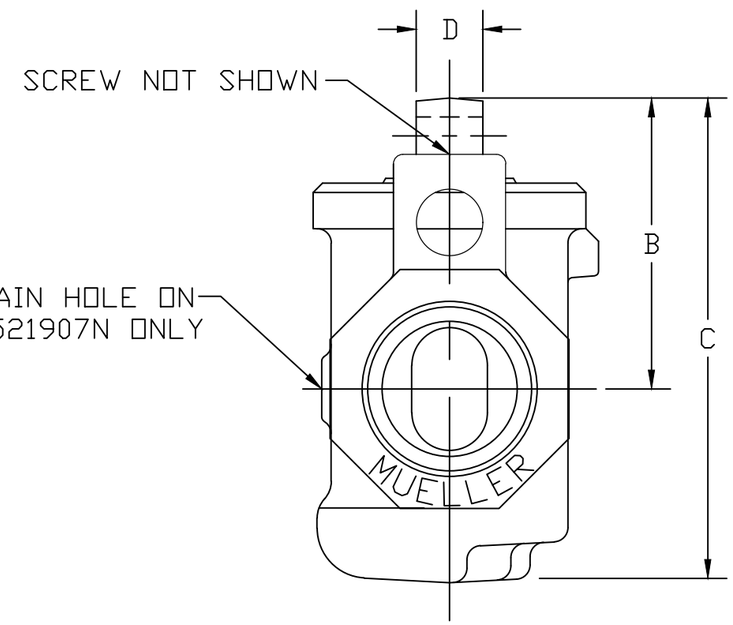

ALL WETTED PARTS ARE NO LEAD BRASS ALLOY

FILEPATH: PROD-ENG\MUELLER\APPROVED\H1520907N(H1521907N)

REV	ECR	DESCRIPTION	DATE	BY	CHKR

PER EST NO: DXXXX EST FIN WT = 0.0000 lbs

DRFTR	RWB	5/8/15
CHKR		
ENGR		
MGR		
	BY	DATE
STK No:		
MAT'L:		
DESCR.	MARK II ORISEAL NLB VALVE 110 CTS THAW x 110 CTS THAW	

MUELLER

UNLESS OTHERWISE NOTED
SURFACE PREPARATION:
BREAK CORNER(S) ---- .000
SURFACE FINISH -- XX RMS
TOLERANCE(S):
LINEAR ---------- ± .016
ANGULAR --------- ± 0°30'

THIRD ANGLE PROJECTION

REF. No.

SCALE FULL

DWG NUMBER H1520907N

TITLE TO AND OWNERSHIP OF THIS ENGINEERING DATA REMAINS IN Mueller Co. NO USE IS TO BE MADE OF THIS DATA EXCEPT AS SPECIFICALLY AUTHORIZED BY Mueller Co. ASSENT ON THE PART OF THE RECIPIENT TO THESE CONDITIONS IS PRESUMED

WAS EXP NO:

DWG NUMBER H1520907N

80-MRKT