No.	DESCRIPTION	MATERIAL
1	SPUD	LEAD FREE BRASS ALLOY ASTM B584
2	O-RING	EP ASTM D2000 RUBBER
3	GRIP RING	CELCON M90 RED CF2001

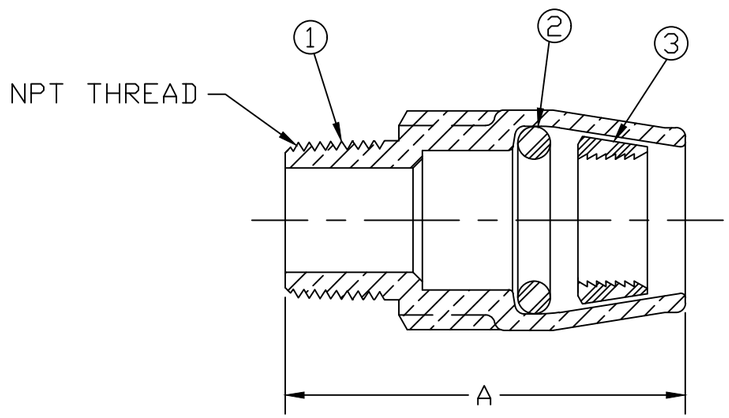

SIZE	A	NPT
3/4	2.64	3/4"
1	2.92	1"

MEETS ALL REQUIREMENTS OF AWWA C800
ALL WETTED PARTS ARE LEAD FREE BRASS ALLOY C89833/C87850
ALL NON WETTED PARTS ARE BRASS ALLOY C83600/C87850

DRFTR	AD	03/03/23
CHKR		
ENGR		
MGR		
	BY	DATE
STK No:		

MUELLER

UNLESS OTHERWISE NOTED
SURFACE PREPARATION:
BREAK CORNER(S) ---- .000
SURFACE FINISH -- XX RMS
TOLERANCE(S):
LINEAR ---------- ± .000
ANGULAR --------- ± 0°00'

THIRD ANGLE PROJECTION

REF. No.

SCALE FULL

MAT'L:

DESCR. SERVICE FITTING (MIP x INSTA-TITE)

DWG NUMBER H15424N

TITLE TO AND OWNERSHIP OF THIS ENGINEERING DATA REMAINS IN Mueller Co. NO USE IS TO BE MADE OF THIS DATA EXCEPT AS SPECIFICALLY AUTHORIZED BY Mueller Co. ASSENT ON THE PART OF THE RECIPIENT TO THESE CONDITIONS IS PRESUMED

DWG NUMBER H15424N