No.	DESCRIPTION	MATERIAL
1	COUPLING	CAST LOW LEAD BRASS ALLOY
2	PJ CPLG NUT	CAST BRONZE ASTM B62 ALLOY C83600
3	PJ GASKET	ASTM D2000 NITRILE
4	PJ WASHER	POLYPROPYLENE

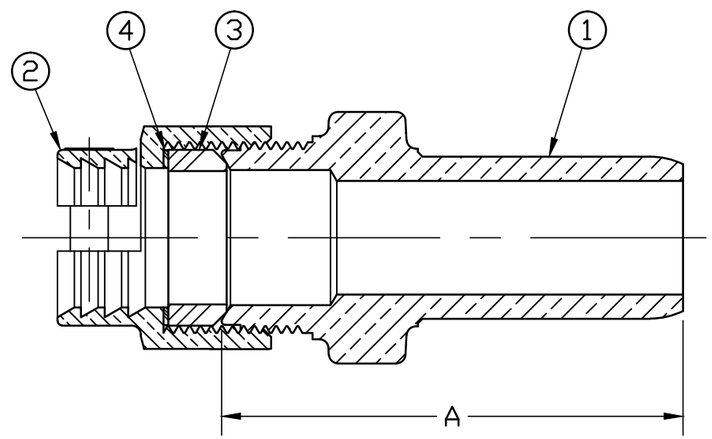

SIZE	A
3/4″	3.05
1″	3.46

ALL WETTED PARTS ARE LOW LEAD BRASS ALLOY

FILEPATH: PROD-ENG\MUELLER\APPROVED\P12230N

REV	ECR	DESCRIPTION	DATE	BY	CHKR

DRFTR	RWB	7/11/13
CHKR		
ENGR		
MGR		
	BY	DATE
STK No:		
MAT'L:		
DESCR.	LLB CONVERSION COUPLING (CTS PJ x IPS TUBE)	

Mueller Co.

UNLESS OTHERWISE NOTED
SURFACE PREPARATION:
BREAK CORNER(S) ---- .000
SURFACE FINISH -- XX RMS
TOLERANCE(S):
LINEAR ---------- ± .000
ANGULAR --------- ± 0°00′

THIRD ANGLE PROJECTION

REF. No.

SCALE NONE

DWG NUMBER P12230N

DWG NUMBER P12230N

44^2-MRKTG

TITLE TO AND OWNERSHIP OF THIS ENGINEERING DATA REMAINS IN Mueller Co. NO USE IS TO BE MADE OF THIS DATA EXCEPT AS SPECIFICALLY AUTHORIZED BY Mueller Co. ASSENT ON THE PART OF THE RECIPIENT TO THESE CONDITIONS IS PRESUMED