No.	DESCRIPTION	MATERIAL
1	SPUD	CAST NO LEAD BRASS ALLOY
2	CLPG NUT SUB	CAST BRASS ASTM B62 ALLOY C83600
3	PJ CTS GSKT	EPDM D2000
4	PJ WASHER	POLYPROPYLENE

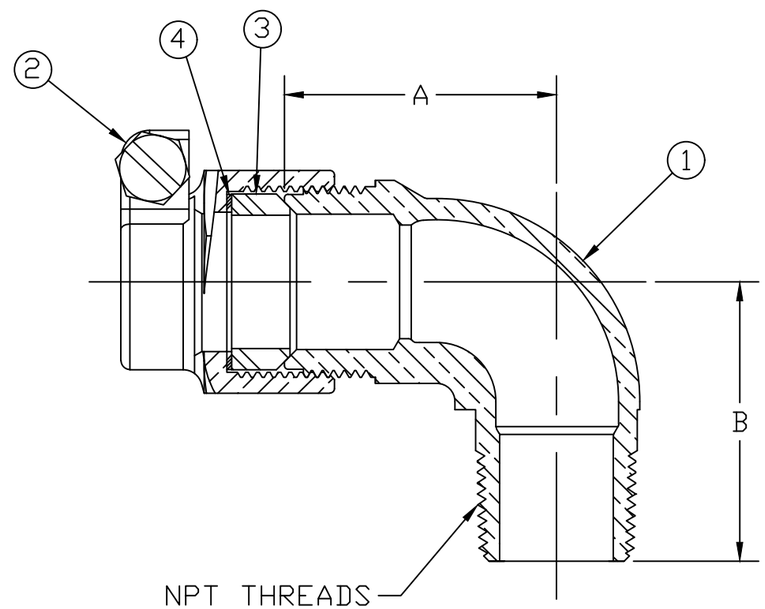

SIZE	A	B
3/4	1.796	1.844
3/4x1	2.000	2.000
1	2.000	2.000
1x3/4	2.000	2.000
1-1/2	2.750	2.625
2	3.094	2.969

ALL WETTED PARTS ARE NOW LEAD BRASS ALLOY

FILEPATH: PROD-ENG\MUELLER\ASYSUBMITTALS\P15531N

REV	ECR	DESCRIPTION	DATE	BY	CHKR

PER EST NO: DXXXX EST FIN WT = 0.0000 lbs

DRFTR	RWB	9/16/15
CHKR		
ENGR		
MGR		
	BY	DATE
STK No:		
MAT'L:		
DESCR.	1/4 BEND NLB SERVICE FITTING (PJ CTS x MIP)	

MUELLER

UNLESS OTHERWISE NOTED
SURFACE PREPARATION:
BREAK CORNER(S) ---- .000
SURFACE FINISH -- XX RMS
TOLERANCE(S):
LINEAR ---------- ± .000
ANGULAR --------- ± 0°00'

THIRD ANGLE PROJECTION

REF. No.

SCALE NONE

DWG NUMBER P15531N

DWG NUMBER P15531N

44^2-MRKTG

TITLE TO AND OWNERSHIP OF THIS ENGINEERING DATA REMAINS IN Mueller Co. NO USE IS TO BE MADE OF THIS DATA EXCEPT AS SPECIFICALLY AUTHORIZED BY Mueller Co. ASSENT ON THE PART OF THE RECIPIENT TO THESE CONDITIONS IS PRESUMED